CONTRACT DOCUMENTS
&
TECHNICAL SPECIFICATIONS

HU 2026-15

WEC 1 BOTTOM ASH HOPPER WATER RECIRCULATION SYSTEM CONSTRUCTION

CITY OF HASTINGS

Proposals Will Be Opened Promptly At
1:30 PM, Wednesday, February 18, 2026

Bid Submitted By: _____

HASTINGS
Nebraska

Table of Contents

CONTRACT AND SPECIFICATIONS
FOR
WEC UNIT 1 BOTTOM ASH WATER
RECIRCULATION SYSTEM CONSTRUCTION
FOR
CITY OF HASTINGS
HASTINGS, NEBRASKA

Contract No. HU 2026-15

I. BIDDING DOCUMENTS

Advertisement for Bids 1-2
Instruction to Bidders 3
Contact Sheet... 4
Submittal Instructions 5
Mailing Instructions 6

II. CONTRACT FORMS

Proposal.....7-10
Formal Contract Agreement.....11-12
Performance Bond.....13-14
Insurance 15
Affidavit 16

III. TECHNICAL SPECIFICATIONS

Section 1 – General Conditions 17-36
Section 2 – General Description and Scope of Work 37-42
Section 3 – Technical Specifications 43-79
Appendix A – Drawings 80

ADVERTISEMENT FOR BIDS

The City of Hastings, Nebraska, will receive bids for the **WEC 1 Bottom Ash Hopper Water Recirculation System Construction, HU 2026-15** until 1:30 p.m. at the City of Hastings, 1228 N Denver Ave., Hastings, Nebraska, on Wednesday, February 18, 2026, at which time and place all bids will be publicly opened and read aloud. **Brief description of project: Installation of bottom ash hopper overflow tank, pumps, piping, valves, and fittings for a bottom ash hopper flushing water recirculation system for WEC Unit 1 in Hastings, Nebraska.** If you plan on bidding and are not already on our approved bidders list for this project, you are REQUIRED to fill out the Plan Holders Submittal Form that is located on the City website: https://www.cityofhastings.org/bids/.

The Contract Documents, including plans and specifications, are on file at the City of Hastings 1228 N Denver Avenue, Hastings, Nebraska 68901. Copies of the plans and specifications in electronic (PDF) format may be obtained by visiting the City of Hastings Website: www.cityofhastings.org/bids. A paper copy is available for $75.00, plus sales tax ($5.25), plus shipping.

Each bid shall be accompanied by a certified check, drawn on a solvent bank in the State of Nebraska, or a bid bond in an amount of not less than five percent (5%) of the total bid of all contract construction costs, made payable to the City Treasurer of the City of Hastings, Nebraska, as security that the bidder to whom the contract may be awarded will enter into a contract to build all the improvements in accordance with this notice and give bond in the sum hereinafter provided for the construction of improvements.

No bid shall be withdrawn after opening of bids without the consent of the City of Hastings, Nebraska, for a period of sixty (60) days after scheduled time of closing bids.

Time is of the essence in this contract. In evaluating bid(s) received, the City will consider the timelines of completion of prior construction contracts, existing workload of bidders and available manpower that bidder commits to the project.

The successful bidder will be required to furnish a Performance Bond in the sum of the full amount of the Contract within ten (10) days of the date of award. No additional time will be allowed the Contractor for providing the Performance Bond.

DATED AT HASTINGS, NEBRASKA, this 16th day of January, 2026.

CITY OF HASTINGS, NEBRASKA

_____

Tyler Ficken, City Clerk

Publish:
January 20, 2026
January 27, 2026

Furnish 2 proofs of publication

INSTRUCTIONS TO BIDDERS

All proposal information, including any unit price fill in sheets or other required information, shall be submitted on the proposal forms hereto attached. Copies of addenda, if any, shall be signed and attached. City of Hastings does NOT accept faxed or emailed bid returns.

Bidders shall inform themselves of all relevant matters, and, if awarded the contract, shall not be allowed any extra compensation by reason of any matter or thing concerning which such Bidder might not have fully informed himself, prior to the bidding.

The Bidder bidding on the Specifications herein, who has exceptions to those called for in the Specifications, must so state in the space provided below and/or attach a letter explaining in detail the exceptions taken to those required in the Specifications. This letter of explanation shall become a part of the bid and shall be attached hereto. Failure by the Bidder to outline his exceptions will require the successful Bidder to comply with these Specifications.

EXCEPTIONS TO SPECIFICATIONS:

_____

_____

_____

_____

_____

The City will not assume obligations resulting from losses or damages until acceptance of the equipment.

If any person contemplating submitting a bid for this contract is in doubt as to the true meaning of any part of the Specifications or other proposed contract documents, he may submit to Purchaser a written request for an interpretation thereof. The person submitting the request will be responsible for its prompt delivery. Any interpretation of the proposed documents will be made only by addendum duly issued or delivered to each person receiving a set of such documents. The Purchaser will not be responsible for any other explanation or interpretation of the proposed documents.

All addendums must be signed and attached to bid documents.

IF YOU HAVE QUESTIONS OR NEED HELP ON THESE SPECIFICATIONS

PLEASE CONTACT ANY OF THE FOLLOWING:

TECHNICAL QUESTIONS

Brandon Miller – Mechanical Engineer
1228 N Denver Ave
Hastings, NE 68901
Ph# 402-462-3653
Email: bidquestions@cityofhastings.org

GENERAL QUESTIONS OR REQUESTS

Renae Griess
Engineering Admin Assistant
Ph# 402-462-3665
Email: bidquestions@cityofhastings.org

IMPORTANT SUBMITTAL INSTRUCTIONS

ON HOW TO SUBMIT YOUR BID
FOR
CITY OF HASTINGS
WEC UNIT 1 BOTTOM ASH HOPPER WATER
RECIRCULATION SYSTEM CONSTRUCTION
Contract No. HU 2026-15

Your bid MUST be returned by means of hand delivery, USPS, Fed-X, UPS, or other carrier. City of Hastings DOES NOT ACCEPT bids that are faxed or emailed.

ALL the following documents are TO BE SUBMITTED in your bid packet.

1. **Cover sheet with your company's name filled in**
2. **ALL addendums received – must be acknowledged and signed**
3. **Bid Bond**
4. **If Exceptions, Instructions to Bidders with any exceptions listed**
5. **Proposal Page(s)**

FAILURE TO RETURN REQUIRED BID DOCUMENTS

COULD SUBJECT YOUR BID PROPOSAL TO BE REJECTED

IMPORTANT MAILING (OR HAND DELIVERY) INSTRUCTIONS

Please address your return envelope as shown in the example below. All bids must be sealed in a properly marked envelope.

To hand deliver, please drop off between the hours of 8am – noon and 1-5pm Monday through Friday.

Your Return Address

City of Hastings
Attn: Renae Griess
1228 N Denver Avenue
Hastings, NE 68901

This Information MUST BE typed or written in the lower left hand corner of return envelope
OR SIMPLY CUT OUT AND TAPE ON YOUR RETURN ENVELOPE

✂ ✂ ✂ ✂

BID DOCUMENTS ENCLOSED
ATTN: Renae Griess
Contract No: WEC1 BA Water Recirc System HU 2026-15
Bid Opens: Wednesday, February 18, 2026 @ 1:30 PM

If returning Fed-X or similar carrier, please enclose the bid in an "inner" envelope which is sealed. Please make sure BOTH envelopes are properly marked on the OUTSIDE OF THE ENVELOPE as shown in the example above.

One bid per envelope. Bid submittal via email is not allowed. Bids must be checked in to the City of Hastings prior to 1:30 pm deadline.

Proposal for WEC Unit 1
Bottom Ash Water Recirculation System
Contract No. HU 2026-15

TO: City of Hastings
1228 N. Denver Ave
Hastings, NE 68901

Bid Opening: Feb 18, 2026 (Wednesday)
SEALED BIDS MUST BE RECEIVED BY 1:30 P.M. AND WILL BE OPENED PROMPTLY AT THAT TIME

We, the undersigned, being familiar with all parts of these documents, being Notice to Bidders, Bid Proposal Price Sheets, Contract Document Forms, Plans and Specifications, Affidavit, Material List, and all other parts of this document, do herein submit our proposal to furnish, install, and perform all tasks required to complete said project area(s) for the total costs.

The labor portion is not subject to sales tax; however, the material portion is taxed accordingly. The project is outside of city limits and is subject to **5.5% sales tax**. See following tax rules and regulation language.

BID SECTION I: Bottom Ash Water Recirculation System Construction

Item#	Description	Unit Price	Total
1	Mobilization	LUMP SUM	$
2	Labor for installation of B&W supplied equipment per the Equipment List, Project Drawings, and Scope of Work	LUMP SUM	$
3	Labor for installation of B&W supplied pipe supports per project drawings	LUMP SUM	$
4	Labor for installation of B&W supplied piping, fittings, valves, instrumentation and other hardware per valve list, project drawings, and scope of work	LUMP SUM	$
5	Supply of materials for piping, fittings, valves for compressed air system, air water reservoir relocation, and cap on ash water header	LUMP SUM	$
6	Labor for installation of piping, fittings, valves for compressed air system, air water reservoir relocation, and cap on ash water header	LUMP SUM	$
7	Labor for demolition of existing piping, valves, and fittings per project drawings	LUMP SUM	$
8	Sales Tax on materials for the above items - (For Option 1 Contractors only)	LUMP SUM	$
TOTAL SECTION I			
			$
	In Words		

BID SECTION II: Bottom Ash Water Recirculation System Start-Up Support

Proposal for WEC Unit 1
Bottom Ash Water Recirculation System
Contract No. HU 2026-15

Item#	Description	Unit Price	Total
1	Labor for start-up support provide a daily rate and expected number of crew members needed	LUMP SUM per day	$

Note: Material and Labor equipment base grouting, touch-up painting, all testing and NDE, and all other labor and materials not explicitly called out in proposal shall be subsidiary to line items listed in proposal.

Liquidated Damages: The Contractor shall pay a fee of $1,000.00 per working day for failure to deliver the work before the specified dates in accordance with Section 1.806 – Liquidated Damages of Section 1 – General Conditions.

Substantial Completion Date: April 17, 2026
Project Completion Date (including system checkout and startup): May 1, 2026

Note: Unit prices shall prevail in the case of potential mathematical discrepancies.

The labor portion is not subject to sales tax; however, the material portion is taxed accordingly. See following tax rules and regulation language.

For purposes of sales/use tax, this project falls under Nebraska Sales and Use Tax Regulation 1-017 for Contractors. By definition, a contractor is "any person who repairs property annexed to, or who annexes property to, real estate, including leased property, by attaching building materials to the annexed property or improvement being built or repaired, or who arranges for annexation of property." Please refer to www.revenue.nebraska.gov/salestax.html for additional information.

For calculating this proposal:

- All contractors are to include sales/use tax on materials in the bidder's prices, if applicable.
- **Option 1 contractors must separately state materials, sales tax, labor, and other charges on all invoices for the project. Any invoices submitted that do not include this required breakdown of the charges will not be accepted for payment. (This requirement does not apply to Option 2 or 3 contractors.)**
- The sales/use tax rate on building materials is 7.0% for projects within Hastings' city limits and 5.5% for projects outside of city limits.
- Contractor labor charges for this proposal are not subject to sales/use tax per the Nebraska Department of Revenue Notice to Contractors effective October 1, 2007.

Proposal for WEC Unit 1
Bottom Ash Water Recirculation System
Contract No. HU 2026-15

- In submitting this bid, the bidder certifies that he will comply with all applicable laws, ordinances, and codes of the City of Hastings and the State of Nebraska.
- For this project, Contractor will supply all materials.

What contractor option have you registered with the Nebraska Department of Labor (must select one)? Please refer to https://dol.nebraska.gov for additional information.

Option 1 _____

Option 2 _____

Option 3 _____

Is Nebraska Sales/Use Tax included in the above prices.

Yes _____ No _____

(ALL COSTS TO INCLUDE CITY AND STATE SALES TAX)

The undersigned bidder agrees to furnish the required performance bond and to enter into a contract within ten (10) days after acceptance of the Proposal and further agrees to complete all work covered by the foregoing Proposal in accordance with specified requirements.

Exceptions: No ☐ Yes ☐ (If yes, list on ***"Instructions to Bidders"*** page)

Any modification of bid proposal will be considered non-conformance of the bid. All exceptions to the proposal shall be noted as an exception to the bid.

City of Hastings may at its own discretion delete any project area and / or component prior to award of contract. City of Hastings will award all bid sections to one contractor.

In submitting this proposal, it is further understood that the City of Hastings reserves the right to reject any or all proposals and may waive any informalities and may accept the proposal which best suits its needs. It is further understood that this proposal may not be withdrawn for a period of sixty days (60) days after bids are opened.

All bid documents, including proposals, bid bonds, subcontractor designation, etc., must be submitted with original signatures. No copies will be accepted.

Proposal for WEC Unit 1
Bottom Ash Water Recirculation System
Contract No. HU 2026-15

OFFICIAL NAME & ADDRESS

Firm Name	Signature
Address	Typed or Printed Name
City, State, Zip	Title
Phone No.	Date
Fax No.	Email Address

ALL BIDS MUST BE CHECKED IN TO THE CITY OF HASTINGS PRIOR TO 1:30 PM DEADLINE

AGREEMENT

THIS AGREEMENT, made and entered into this __ day of _____, 2026, by and between the City of Hastings, Party of the First Part, hereinafter called the "Purchaser" or "City", and _____of (town) _____ in the State of _____, Party of the Second Part, hereinafter called the "Contractor".

WITNESSETH: THAT,

WHEREAS: The Purchaser has caused the necessary contract documents to be prepared for defining material, equipment, and/or labor to be supplied to the City of Hastings and delivered complete as specified in the accompanying contract documents.

WHEREAS: The Purchaser has advertised for bids from Contractors, has received said bids, analyzed same and duly awarded a contract to the "Contractor", "Party of the Second Part", for material, equipment, and/or labor as hereinafter set forth and as stated more in detail in the Proposal and related contract documents to wit; Notice to Bidders, Instructions to Bidders, Specifications; all of which documents are attached hereto and made a part of this Contract.

NOW, THEREFORE: It is hereby agreed that for the sum of_____.
($ _____)

to be paid by the Purchaser, within Thirty (30) days after the acceptance of material, equipment, and/or labor by the Purchaser, to the Contractor, the Contractor agrees to furnish all materials, equipment, and/or labor as required by the accompanying specifications, and the aforesaid contract documents, for **HU 2026-15 WEC1 Bottom Ash Hopper Water Recirculation System Construction.**

All materials, equipment, and/or labor shall be in accordance with the accompanying contract documents and specifications which are as much a part of this Agreement as if repeated verbatim herein.

It is further agreed that the Contractor will start work promptly, furnish the necessary drawings promptly and complete the work in the number of days set forth in the Proposal.

IN WITNESS WHEREOF: The Parties of the First and Second Parts have hereto set their hands and seals on the day and year above written.

CITY OF HASTINGS
Party of the First Part

By: _____

Date: _____

ATTEST:

_____
City Clerk

CONTRACTOR
Party of the Second Part

SEAL

_____

By: _____

Title: _____

Date: _____

APPROVED TO FORM:

_____
City Attorney

Note: If executed by one other than President, Partner or the individual Owner, a Power-of-Attorney authorizing execution should accompany this Contract.

PERFORMANCE BOND

KNOW ALL MEN BY THESE PRESENTS:

That we, the undersigned, _____, as principal, and _____, a corporation organized and existing under the laws of the State of _____, and duly authorized to transact business in the State of Nebraska, as surety are held and firmly bound unto the CITY OF HASTINGS, NEBRASKA, a municipal corporation organized and existing under the laws of the State of Nebraska, hereinafter referred to as CITY, in the penal sum of _____ Dollars ($_____), lawful money of the United States, for the payment of which will and truly be made, we the said principal and the said surety do hereby bind ourselves, our heirs, executors, administrators and assigns, jointly and severally, by these presents as follows:

The condition of this obligation is such that, whereas the principal, by an instrument in writing attached hereto and bearing the date of _____, 20____, has agreed with the CITY to do all work necessary and to furnish all labor, materials, supplies, tools and equipment to

_____

_____

_____

as specified thereby and in the specifications, proposals and contract forming the Contract Documents attached thereto and made a part hereof:

NOW THEREFORE, if the principal shall well and truly in good, sufficient and in a workmanlike manner, and to the satisfaction of the CITY perform and complete the work required, and shall defend, indemnify and save harmless the CITY against all damages, claims, demands, expenses and charges of every kind (including claims of patent infringement) arising from any act, omission or neglect of said principal, his agents, servants or employees, with relation to said work, and shall pay all costs, charges, rentals and expenses for labor, materials, supplies and equipment and deliver the said improvement to the CITY completed and ready for operation and free from all encumbrances or claims for labor, materials or otherwise, and shall pay all other expenses lawfully chargeable to the CITY, and this bond shall also be for the use and benefit of all persons who may perform any work or labor or furnish any material in the execution of said Contract and may be

sued on thereby in the name of any such party claiming the benefit hereof, then this obligation shall be void, otherwise the same shall remain in full force and effect. This obligation shall be in full force and effect for the full guarantee period provided in the specifications contained herein.

PROVIDED FURTHER, that said surety for value received hereby stipulates and agrees that no change, extension of time, alteration or addition to the terms of the Contract or the work to be performed thereunder or the specifications accompanying the same shall in any way affect its obligation on this bond, and it does hereby waive notice of any change, extension of time, alteration or addition to terms of the Contract, to the work or to the specifications.

PROVIDED FURTHER, that if the principal of his, their or its subcontractor or subcontractors fail to duly pay for any labor, materials team, hire sustenance, provisions, provender or any other supplies or materials used or consumed by such contractor of his, their or its subcontractors in performance of the work contracted to be done, the surety will pay the same in any amount not exceeding the sum specified in the bond together with interest as provided by law.

IT WITNESS WHEREOF, said principal and surety have hereunto set their hands and seals at _____ this _____ day of _____, 20____,

This Bond is executed in triplicate counterparts.

_____
Principal

(SEAL)

_____
Street Address

_____
Witness

_____
City, State, Zip

_____
Name of Person Executing

ATTEST:

_____
Surety

_____

By: _____
Title: _____

INSURANCE COVERAGE

The undersigned hereby certifies that Workmen's Compensation, Public Liability and Property Damage, and Automobile Liability and Property Damage Insurance is in force and effect in accordance with the requirements contained in "Instruction To Bidders" which is a part of this document "Bid Proposal And Specifications". We further agree to give ten (10) days notice to the Public Power Generation Agency before effective date of cancellation or reduction of any of the above coverage.

This Insurance Coverage applies only to _____

_____

Dated _____

_____
SUPPLIER

By _____

Title_____

Date _____

_____
INSURANCE COMPANY

By_____

Title_____

Address_____

_____

Date_____

A F F I D A V I T

State of Nebraska)
) ss.
County of Adams)

I _____ , _____
Name Title

of _____
Firm Name

do hereby certify that all subcontractors, vendors, persons or firms who have furnished labor or

material for the _____

_____

_____

have been fully paid and that all taxes have been paid.

_____
Signature

_____
Date

Subscribed and sworn to me this _____ day of _____, 20_____

_____
Notary Public

My commission expires _____.

A signed and notarized copy of affidavit must be in City of Hastings file before final payment may be made.

Copy of forms will be supplied by City of Hastings prior to final payment.

GENERAL CONDITIONS

GC.1 Contract Documents

It is understood and agreed that the Notice to Bidders, Instructions to Bidders, Proposal, Proposal Data, Contract Agreement, Performance Bond, Payment Bond, General Conditions, Special Conditions, Specifications, Drawings, Addenda, and Change Orders issued by the Purchaser or the Engineer, and specifications and engineering data furnished by the Contractor and accepted by the Purchaser, are each included in this Contract and the work shall be done in accordance therewith.

GC.2 Definitions

Words, phrases, or other expressions used in these contract documents shall have meanings as follows.

1. "Contract" or "contract documents" shall include the items enumerated above under CONTRACT DOCUMENTS.
2. "Purchaser" shall mean the City of Hastings named and designated in the Contract Agreement as "Party of the First Part," and their duly authorized agents. All notices, letters, and other communication directed to the Purchaser shall be addressed and delivered to:

   City of Hastings
   1228 North Denver Avenue
   P.O. Box 398
   Hastings, Nebraska 68902-0289
   Attention: Brandon Miller
   Mechanical Engineer
3. "Contractor" shall mean the corporation, company, partnership, firm or individual named and designated in the Contract Agreement as the "Party of the Second Part," who has entered into this Contract for the performance of the work covered thereby, and its, his, or their duly authorized representatives.
4. "Subcontractor" shall mean and refer only to a corporation, partnership, or individual having a direct contract with the Contractor for performing work covered by these contract documents.
5. "Engineer" shall also refer to City of Hastings as the purchaser.
6. "Date of contract," or equivalent words, shall mean the date written in the first paragraph of the Contract Agreement.
7. "Day" or "days," unless herein otherwise expressly defined, shall mean a calendar day or days of 24 hours each.
8. "The work" shall mean the equipment, supplies, materials, labor, and services to be furnished under the contract and the carrying out of all obligations imposed by the contract documents.

9. "Drawings" or "plans" shall mean all (a) drawings furnished by the Purchaser as a basis for proposals, (b) supplementary drawings furnished by the Purchaser to clarify and to define in greater detail the intent of the contract drawings and specifications, (c) drawings submitted by the successful bidder with his proposal, provided such drawings are acceptable to the Purchaser, (d) drawings furnished by the Purchaser to the Contractor during the progress of the work, and (e) engineering data and drawings submitted by the Contractor during the progress of the work, provided such drawings are acceptable to the Engineer.

10. Whenever in these contract documents the words "as ordered," "as directed," "as required," "as permitted," "as allowed," or words or phrases of like import are used, it shall be understood that the order, direction, requirement, permission, or allowance of the Purchaser or Engineer is intended only to the extent of judging compliance with the terms of the contract; none of these terms shall imply that the Purchaser or the Engineer has any authority or responsibility for supervision of the Contractor's forces or construction operations, such supervision and the sole responsibility therefor being strictly reserved for the Contractor.

11. Similarly the words "approved," "reasonable," "suitable," "acceptable," "proper," "satisfactory," or words of like effect and import, unless otherwise particularly specified herein, shall mean approved, reasonable, suitable, acceptable, proper, or satisfactory in the judgment of the Purchaser or Engineer, to the extent provided in (10) above.

12. Whenever in these contract documents the expression "it is understood and agreed" or an expression of like import is used, such expression means the mutual understanding and agreement of the parties executing the Contract Agreement.

13. "Official acceptance" shall mean the Purchaser's written acceptance of all work performed under this Contract, based on the Engineer's final inspection and issuance of a final payment certificate.

14. “Project completion” shall mean that the Bottom Ash Water Recirculation System is ready for operation. The project construction completion date is at the end of day, April 17th, 2026 with the system ready for operation on May 1st, 2026.

15. “Final Acceptance” shall mean that all work has been completed in accordance with these specifications, the project has been walked down, punch list items have been completed, and Purchaser is ready to accept the Work as complete.

16. “Stop Work Order” shall mean that the Purchaser will provide a written order to the Contractor requiring the Contractor to stop all, or any part of, the work called for by this Contract, for a time defined by the order. The order shall specify the reasoning for the suspended work, which may include, but are not limited to, engineering considerations, changes to the

project scope, safety or environmental concerns, or other issues detrimental to the project. Upon receipt of the order, the Contractor shall immediately comply with its terms and take all reasonable steps to minimize the incurrence of costs allocable to the work covered by the order. As soon as practical, the Purchaser and Contractor shall discuss the impacted activities, schedule, materials, labor, and equipment. If applicable, Purchaser and Contractor will seek to negotiate an equitable adjustment in the schedule, Contract price, or both, and the contract shall be modified, or a change order issued, as necessary. Upon any agreement and finalization of commercial conditions, Purchaser to provide written order to cancel the stop work order.

GC.3 Execution of the Contract

Once the bids have been evaluated, the Purchaser will electronically submit the Contract Agreement to the Contractor. The Contractor shall sign the Contract Agreement and return to Purchaser for the final approval process. Upon final approvals, the Contract Agreement will be signed by the Purchaser and electronically returned to the Contractor. Contractor shall then mail one hardcopy of required bonds, one electronic or hardcopy of insurance documents, and one electronic or hardcopy of power of attorney forms to the Purchaser. The date of contract on the bond forms and power of attorney forms shall match the date provided on the Contract Agreement by the Purchaser.

The Purchaser will review the final documents and electronically send a final conformed contract to the Contractor.

GC.4 Legal Addresses

The business address of the Contractor listed in the Proposal is hereby designated as the place to which all notices, letters, and other communication to the Contractor will be mailed or delivered. The address of the Purchaser appearing in section GC.2 is hereby designated as the place to which all notices, letters, and other communication to the Purchaser shall be mailed or delivered. Either party may change his address at any time by an instrument in writing delivered to the Engineer and to the other party.

GC.5 Scope and Intent of Contract Documents

The various parts of the contract documents are intended to supplement but not necessarily duplicate each other. Any work exhibited in one part and not in another shall be executed as if it had been set forth in all parts, so that the work will be performed according to the complete design as determined by the Engineer.

Should anything necessary for a clear understanding of the work be omitted from the contract documents, or should the requirements appear to be in conflict, the Contractor shall secure written instructions from the Engineer before proceeding with the work affected thereby. It is understood and agreed that the work shall be performed according to the true intent of the contract documents.

GC.6 Independent Contractor

The relationship of the Contractor to the Purchaser shall be that of an independent contractor.

GC.7 Assignment

The Contractor shall not assign the work, or any part thereof, without the previous written consent of the Purchaser, nor shall he assign, by power of attorney or otherwise, any of the money payable under this Contract unless written consent of the Purchaser has been obtained. No right under this Contract, nor claim for any money due or to become due hereunder shall be asserted against the Purchaser, or persons acting for the Purchaser, by reason of any so-called assignment of this Contract or any part thereof, unless such assignment has been authorized by the written consent of the Purchaser. In case the Contractor is permitted to assign moneys due or to become due under this Contract, the instrument of assignment shall contain a clause subordinating the claim of the assignee to all prior liens for services rendered or materials supplied for the performance of the work.

GC.8 Oral Statements

It is understood and agreed that the written terms and provisions of this agreement shall supersede all oral statements of representatives of the Purchaser, and oral statements shall not be effective or be construed as being a part of this Contract.

GC.9 Reference Standards

Reference to the standards of any technical society, organization, or association, or to codes of local or state authorities, shall mean the latest standard, code, specification, or tentative standard adopted and published at the date of taking bids, unless specifically stated otherwise.

GC.10 Source of Materials

To the extent possible, materials, and equipment (including components thereof) furnished under these specifications shall be produced, processed, manufactured, and assembled within the United States of America. Substitution of foreign materials for domestic materials will not be permitted unless such substitution is clearly stated in the Proposal and accepted by the Purchaser.

GC.11 Contractor to Check Drawings and Lists

The Contractor shall check all dimensions, elevations, and quantities indicated on the drawings and lists furnished to him by the Engineer. The Contractor shall notify the Engineer of any discrepancy between the drawings and the conditions at the site, or any error or omission in the drawings, or in the layout as given by stakes, points, or instructions, which he may discover in the course of the work. The Contractor will not be allowed to take advantage of any error or omission in the drawings or other contract documents that a reasonable inspection of them by Contractor would reveal. Full instructions will be furnished by the Engineer should such error or omission be discovered, and the Contractor shall carry out such instructions as if originally specified.

GC.12 Figured Dimensions to Govern

Dimensions and elevations indicated on the drawings shall be accurately followed even though different from scaled measurements. No work indicated on the drawings, the dimensions of

which are not indicated, shall be executed until necessary dimensions have been obtained from the Engineer.

GC.13 No Waiver of Rights

Neither the inspection by the Purchaser or Engineer or any of their officials, employees, or agents, nor any order by the Purchaser or Engineer for payment of money, or any payment for, or acceptance of, the whole or any part of the work by the Purchaser or Engineer, nor any extension of time, nor any possession taken by the Purchaser or its employees, shall operate as a waiver of any provision of this Contract, or of any power herein reserved to the Purchaser, or any right to damages herein provided, nor shall any waiver of any breach in this Contract be held to be a waiver of any other or subsequent breach.

GC.14 Authority of the Engineer

To prevent delays and disputes, and to discourage litigation, it is agreed by the parties to this Contract that the Engineer shall determine the quantities of work which are to be paid for under the contract and shall resolve all questions in relation to the work.

If, in the opinion of the Contractor or the Purchaser, a decision made by the Engineer is not in accordance with the meaning and intent of the contract, either party may file with the Engineer and the other party to the contract, within 30 days after receipt of the decision, a written objection to the decision. Failure to file an objection within the allotted time will be considered acceptance of the Engineer's decision and the decision shall become final and conclusive.

The Engineer's decision and the filing of the written objection thereto shall be a condition precedent to the right to request arbitration or to start action in court.

It is the intent of this agreement that there shall be no delay in the execution of the work and the decision of the Engineer as rendered shall be promptly observed.

GC.15 Engineering Inspection

The Purchaser may appoint (either directly or through the Engineer) such inspectors as the Purchaser deems proper to inspect the work for compliance with the contract documents. The Contractor shall furnish all reasonable assistance required by the Engineer, or inspectors, for the proper inspection of the work. Should the Contractor object to any interpretation of the contract by an inspector, the Contractor may make written appeal to the Engineer for a decision.

Inspectors shall have the authority to reject work which is unsatisfactory, faulty, or defective or does not conform to the requirements of the contract documents. Inspection shall not relieve the Contractor from any obligation to construct the work strictly in accordance with the contract documents.

Upon the failure of the Contractor or its Subcontractors to comply with any of the requirements of this Contract (but not limited to quality or safety), the Purchaser shall have the authority to stop any portion of the work affected by such failure until such failure is

remedied. If the Purchaser issues a Stop Work Order, the Purchaser shall not be liable for any costs or expenses claimed by Contractor arising out of such issuance. The construction schedule shall not be delayed or extended as a result of the Purchaser's issuance of a Stop Work Order.

GC.16 Contractor Default

If the work to be done under this Contract is abandoned by the Contractor; or if this Contract is assigned by him without the written consent of the Purchaser; or if the Contractor is adjudged bankrupt; or if a general assignment of his assets is made for the benefit of his creditors; or if a receiver is appointed for the Contractor or any of his property; of if at any time the Engineer certifies in writing to the Purchaser that the performance of the work under this Contract is being unnecessarily delayed, that the Contractor is violating any of the conditions of this Contract, or that he is executing the same in bad faith or otherwise not in accordance with the terms of said contract; or if the work is not substantially completed within the time named for its completion or within the time to which such completion date may be extended; then the Purchaser may serve written notice upon the Contractor and his surety of the Purchaser's intention to terminate this Contract. Unless within 5 days after the serving of such notice, a satisfactory arrangement is made for continuance, this Contract shall terminate. In the event of such termination, the surety shall have the right to take over and complete the work, provided that if the surety does not commence performance within 30 days, the Purchaser may take over and prosecute the work to completion, by contract or otherwise. The Contractor and his surety shall be liable to the Purchaser for all excess cost sustained by the Purchaser by reason of such prosecution and completion. The Purchaser may take possession of, and utilize in completing the work, all materials, equipment, tools, and plant on the site of the work.

GC.17 Beginning, Progress, and Completion of the Work

The time of completion is a basic consideration of this Contract. Unless otherwise specified in these contract documents or advised by written order of the Purchaser, the Contractor shall begin work within 10 days after the date of contract. The work shall be prosecuted to completion in accordance with the specified schedule, subject to adjustment as provided in these contract documents.

A detailed construction schedule shall be prepared by the Contractor and submitted to the Purchaser for review. The schedule shall contain the various activities required to perform the work and the dates the activities will be started and completed in order to complete the work in accordance with the specified schedule requirements. The Contractor is responsible for determining the sequence and time estimates of the detailed construction activities. However, the Purchaser reserves the right to require the Contractor to modify any portion of the schedule the Purchaser determines to be impracticable or unreasonable; as required to coordinate the Contractor's activities with those of other contractors, if any, engaged in work for the Purchaser on the site; to avoid undue interference with the Purchaser's operations; and to assure completion of the work by the date or dates stipulated. Upon acceptance by the Purchaser of the Contractor's detailed construction schedule, the Contractor will be responsible for maintaining such schedule.

If at any time the Contractor's work is behind schedule, he shall immediately put into effect definite procedures for getting the work back on schedule. The procedures shall be subject to review and modification by the Purchaser.

GC.18 Hindrances and Delays

The Contractor expressly agrees that in undertaking to complete the work within the time specified, he has made allowances for all hindrances and delays which might usually be expected to occur in performing the work. No claims shall be made by the Contractor for such hindrances and delays.

If the Contractor experiences hindrances and delays which, in his opinion, are not usually to be expected in the performance of the work and which affect the performance of the work, he may request a change in the contract. Such hindrances and delays may include, but not be limited to, acts or failure to act by the Purchaser or other contractors employed by the Purchaser, fires, floods, labor disputes, epidemics, or acts of God. Such hindrances and delays shall not include rain, snow, or other non-severe inclement weather. Claims by the Contractor for any change in the contract due to such hindrances and delays shall be made in accordance with the requirements of Article GC.22, CHANGES TO THE CONTRACT. The Contractor shall use all reasonable means to minimize the extent of the delay.

GC.19 Suspension of Work

The Purchaser reserves the right to suspend and reinstate execution of the whole or any part of the work without invalidating the provisions of the contract. Suspension or reinstatement of the work will be by written notice to the Contractor from the Purchaser.

Suspension of work shall not automatically entitle the Contractor to additional compensation or a change in the contract time; however, the Contractor will be reimbursed for real and unavoidable direct costs incurred by him as a result of such suspension and/or the contract will be extended as required to compensate for any delay due to such suspension. Claims by the Contractor for change of contract time or an adjustment of the contract price, due to work suspensions ordered by the Purchaser shall be made in accordance with the requirements of Article GC.22, CHANGES TO THE CONTRACT. The Contractor shall use all reasonable means to minimize the consequences of such suspension.

GC.20 Cancellation of Work

The Purchaser reserves the right to cancel the unshipped portion of the work by giving written notice to the Contractor. In the event of cancellation, the Purchaser will pay the Contractor reasonable and proper cancellation costs.

Cancellation of the work shall not constitute the basis for a claim for damages or loss of anticipated profits.

The Contractor shall, after consultation with the Purchaser, take all reasonable steps to minimize the costs related to cancellation. The Contractor shall provide the Purchaser with an accounting of costs claimed, including adequate supporting information, and the Purchaser may, at its expense, audit the claimed costs and supporting information.

GC.21 Modifications

The Contractor shall modify the work whenever so ordered by the Purchaser and such modifications shall not affect the validity of the contract. Modifications may involve changes in the amount of the work to be performed or changes in the contract time for which appropriate changes to the contract will be made.

Contract changes due to modifications shall be made in accordance with the requirements of Article GC.22, CHANGES TO THE CONTRACT.

GC.22 Changes to the Contract

The contract may be changed only by duly executed change orders issued by the Purchaser.

If, in the opinion of the Purchaser or the Contractor, any event or action by the other party justifies a change in the contract, either party shall initiate with the other party, within 5 days after such event or action, a request for a change to the contract. All documentation required to substantiate the proposed change shall be submitted within a minimum reasonable time after initiating the request for change. Upon the parties reaching agreement regarding the proposed change, the Purchaser will issue a written change order therefor.
Notwithstanding the foregoing provisions requiring duly authorized change orders, in the event agreement has been reached between authorized representatives of the parties regarding the change in the contract pending processing of such change order, the Contractor shall proceed with the work on the basis of written interim authorization from the Purchaser.

If the Contractor claims that any instruction, request, drawing, specifications, or other directive or action of the Purchaser or the Engineer constitutes a change in the contract, but has not been authorized as such by a change order in writing by the Purchaser, the Contractor shall immediately request a written interim authorization and proceed without delay to perform the work in accordance with such authorization. The Contractor shall provide written notice of the claim or dispute to the Engineer and the Purchaser within 5 days of the request for interim authorization. The Contractor's failure to give said written notice within the 5 day period shall constitute a waiver and relinquishment of any such claim or dispute. The Purchaser's written interim authorization shall not constitute approval of the claim for increased or decreased work, but shall be a condition precedent to the Contractor's right to receive payment for such work and to the Contractor's right to prosecute or maintain any proceeding to recover for such work.

GC.22.1 Contract Price Changes

The contract price may be changed due to modifications which involve extra work or decreased work; or due to work suspensions, hindrances, and delays over which the Contractor has no control. Claims for changes in the contract price shall conform to the requirements specified herein.

GC.22.1.1 Increased Price

If a change in the contract is required due to work suspensions or hindrances and delays, the contract price will be increased according to agreed lump sums, agreed acceleration costs, or

other demonstrable costs submitted by the Contractor and substantiated to the satisfaction of the Purchaser.

If a change in the contract price is required due to a modification which increases the amount of the work, and the added work or any part thereof is of a type and character which can properly and fairly be classified under one or more unit price items of the contract, then the contract price will be increased according to the amount actually done and at the applicable unit price. Otherwise, such work shall be paid for as herein-after provided.

Contract price changes for modifications involving extra work will be based on agreed lump sums or on agreed unit prices whenever the Purchaser and the Contractor agree upon such prices before the extra work is started; otherwise, payments for extra work will be based on actual direct cost plus the specified percentage allowance.

For the purpose of determining whether proposed extra work will be authorized, or for determining the payment method for extra work, the Contractor shall submit to the Engineer, upon request, a detailed cost estimate for proposed extra work. The estimate shall indicate itemized quantities and charges for all elements of direct cost. Charges for the Contractor's and subcontractor's extra profit, extra general superintendence, extra field office expense, and extra overheads shall be indicated as a percentage addition to the total estimated direct cost. Unless otherwise agreed upon by the Contractor and the Purchaser, such percentage additions shall be 15 percent for the extra work performed by the Contractor's own forces or 20 percent for extra work performed by a subcontractor.

When payment for extra work is based on actual direct cost, the Contractor will be paid the actual direct cost plus an allowance of 15 percent if the extra work is performed by the Contractor's own forces or 20 percent if the extra work is performed by a subcontractor. The allowance will be paid as full compensation for the Contractor's and sub-contractor's extra profit, extra general superintendence, extra field office expense, extra overheads, and all other elements of extra cost not defined herein as actual direct cost.

The actual direct cost shall include only those extra costs for labor and material expended in direct performance of the extra work and may include the following.

a. The actual payroll cost of all workmen such as laborers, mechanics, craftsmen, and foremen.
b. The Contractor's or subcontractor's net cost for materials and supplies.
c. The rental charge for vehicles and construction equipment.
d. The transportation charges for equipment.
e. The charges for extra power, fuel, lubricants, water, and special services.
f. The charges for extra payroll taxes, bond premiums, and insurance premiums.

The form in which actual direct cost records are kept, the construction methods, and the type and quantity of equipment used shall be acceptable to the Engineer.

Construction equipment which the Contractor has on the jobsite and which is of a type and size suitable for use in performing the extra work shall be used. The hourly rental charges for equipment shall not exceed 1/2 percent of the latest applicable monthly rental rates as published by Dataquest Incorporated in its "Rental Rate Blue Book" and shall apply to only the actual time the equipment is used in performing the extra work.

When extra work requires the use of equipment which the Contractor does not have on the jobsite, the Contractor shall obtain the concurrence of the Engineer before renting or otherwise acquiring additional equipment. The rental charges for the additional equipment shall not exceed the latest applicable "Rental Rate Blue Book" published rental rates.

GC.22.1.2 Decreased Price

If a change in the contract price is required due to a modification which decreases the amount of work, such decrease shall not constitute the basis for a claim for damages or anticipated profits on work affected by such decrease. Where the value of omitted work is not covered by applicable unit prices, the Engineer shall determine, on an equitable basis, the amount of:

a. Credit due the Purchaser for contract work deleted as a result of an authorized change,

b. Allowance to the Contractor for any actual loss incurred in connection with the purchase, delivery, and subsequent disposal of materials or equipment required for use on the work as planned and which could not be used in any part of the work as actually built, and

c. Any other adjustment of the contract amount where the method to be used in making such adjustment is not clearly defined in the contract documents.

Unless otherwise agreed upon by the Purchaser and the Contractor, the credit due the Purchaser for reductions in the amount of work to be done shall be the estimated direct cost of the deleted work plus an overhead allowance of the following.

- 10 percent of the estimated direct cost if the work was to have been done by the Contractor's own forces, or
- 15 percent of the estimated direct cost if the work was to have been done by a subcontractor.

Direct cost referred to above shall include the category of costs listed as actual direct costs, Items (a) to (f) inclusive of the article entitled Increased Price.

GC.22.2 Contract Time Changes

The contract time may be changed due to work modifications, hindrances and delays, and work suspensions over which the Contractor has no control.

Contract time will not be changed for delays caused by unfavorable weather or unsuitable ground conditions normally incident to the work, inadequate construction force, failure to

place timely orders for equipment and materials, or other causes within the control of the Contractor.

GC.23 Step Dispute Resolution

In the event of any controversy, claim or dispute between the Parties arising out of or relating to this Agreement, including its enforcement, such controversy, claim or dispute, including disputes regarded as such by only one of the Parties, the Parties shall negotiate in good faith to resolve such dispute, including third party mediation, if the Parties so agree.

If no settlement is achieved, either Party may pursue a claim in a federal or state court with competent jurisdiction.

GC.24 Laws and Regulations

The Contractor shall observe and comply with all ordinances, laws, and regulations, and shall protect and indemnify the Purchaser and the Purchaser's officers and agents, including the Engineer, against any claim or liability arising from or based on any violation of the same.

GC.25 Taxes, Permits, and Licenses

The Contractor shall pay all sales, use, and other taxes that are lawfully assessed against the Purchaser or Contractor in connection with the work and shall obtain and pay for all required licenses, permits, and inspections.

The Contractor will be compensated for any increase in tax rates, license fees, and permit fees or any new taxes, licenses, or permits imposed after the date of the Proposal; provided, however, that this provision shall be limited to sales, use, and excise taxes assessed against the completed work and to licenses and permits required specifically for the proposed work.

GC.26 Patents

Royalties and fees for patents covering materials, articles, apparatus, devices, equipment, or processes used in the work shall be included in the contract amount. The Contractor shall satisfy all demands that may be made at any time for such royalties or fees and he shall be liable for any damages or claims for patent infringements. The Contractor shall, at his own cost and expense, defend all suits or proceedings that may be instituted against the Purchaser for alleged infringement of any patents involved in the work and, in case of an award of damages, the Contractor shall pay such award. Final payment to the Contractor by the Purchaser will not be made while any such suit or claim remains unsettled.

GC.27 Materials and Equipment

Unless specifically provided otherwise in each case, all materials and equipment furnished for permanent installation in the work shall conform to applicable standard specifications and shall be new, unused, and undamaged when installed or otherwise incorporated in the work. No such material or equipment shall be used by the Contractor for any purpose other than that intended or specified, unless such use is specifically authorized by the Purchaser in each case.

All required tests in connection with acceptance of source of materials shall be made at the Contractor's expense by a properly equipped laboratory of established reputation whose work

and testing facilities are acceptable to the Purchaser. Any change in origin or method of preparation or manufacture of a material being routinely tested will require new tests. Reports of all tests shall be furnished to the Engineer or Purchaser in as many copies as required.

GC.28 Guarantee

The Contractor guarantees that the work herein contracted will be as specified and will be free from defects in design, workmanship, and materials. Contractor does not guarantee or warrant parts subject to normal wear and tear during operation. If within the guarantee period the work fails to meet the provisions of this guarantee, the Contractor shall promptly correct any defects, including nonconformance with the contract documents by adjustment, repair, or replacement of all defective parts or materials at the Contractor's option and expense, after consulting with the Purchaser on the proposed remedy plans.

Except as otherwise prescribed by the terms of any special guarantees required by the contract documents, the guarantee period shall begin on the date of final payment and shall end 12 months later.

The cost of all materials, parts, labor, transportation, supervision, special tools, and supplies required for replacement or repair of parts and for correction of defects shall be paid by the Contractor or by the surety.

This guarantee shall be extended to cover all repairs and replacements furnished under the guarantee and the period of the guarantee for each such repair or replacement shall be 1 year after correction of the defect except as otherwise prescribed by the terms of any special guarantees required by the contract documents.

The Contractor will be given an opportunity to confirm the existence of the defect, but he shall not delay the correction while making such determination.

If within 10 days after the Purchaser has notified the Contractor of a defect, failure, or abnormality in the work, the Contractor has not started to make the necessary repairs or adjustments, the Purchaser is hereby authorized to make the repairs or adjustments or to order the work to be done by a third party; the cost of the work to be paid by the Contractor.

In the event of an emergency where, in the judgment of the Purchaser, delay would cause serious loss or damage, repairs or adjustments may be made by the Purchaser or a third party chosen by the Purchaser without advance notice to the Contractor and the cost of the work shall be paid by the Contractor or by the surety.

GC.29 Contractor's Insurance Coverage

The Contractor shall not commence work under this Contract until Contractor has obtained all the insurance required under this article. Furthermore, the Contractor shall not allow any sub-contractor to commence work under this Contract until the sub-contractor has obtained the same insurance as is required of the Contractor. The sub-contractor alone shall be responsible for the sufficiency of its own insurance program.

GC.29.1 Certificates of Insurance
Certificates of Insurance acceptable to the Purchaser shall be filed with the Purchaser prior to commencement of the work. All insurance carried shall conform to the relevant provisions of the respective Project Documents and be with insurance companies which are rated “A, X” or better by Best’s Insurance Guide, or other insurance companies of recognized responsibility satisfactory to the Purchaser.

GC.29.2 Proof of Carriage of Insurance. Satisfactory certificates of insurance shall be filed with the Purchaser prior to starting any construction work on this contract. The parties agree that the requirements with respect to requirements to procure and maintain insurance under this Section is a material part of this Agreement.

GC.29.3 Additional Insureds
Insurance coverages furnished under this Contract, with the exception of Workers' Compensation and Employer's Liability, shall include the City of Hastings and their members, directors, officers, agents, and employees as named Additional Insureds on a primary and noncontributory basis, and shall include Products and completed operations with respect to the activities of the Contractor and shall be maintained for the full duration of the project including for a period after completion to include the statute of repose.

Notwithstanding any other provision of these policies, the insurance afforded shall apply separately to each insured, with respect to any claim, suit, or judgment made or brought by or for any other insured, as though a separate policy had been issued to each, except the insurer's liability shall not be increased beyond the amount or amounts for which the insurer would have been liable had only one insured been named.

The Purchaser shall not by reason of their inclusion under these policies incur liability to the insurance carrier for payment of premium for these policies.

GC.29.4 Waiver of Subrogation
To the extent permitted by applicable law, the Contractor and their sub-contractor shall require their insurance carriers, with respect to all insurance policies, to waive all rights of subrogation against the Purchaser their partners, directors, officers, agents, and employees.

GC.29.5 Workers' Compensation and Employer's Liability Insurance
The Contractor shall procure, and shall maintain during the life of this Contract, Workers' Compensation Insurance as required by workers' compensation laws of the State of Nebraska and also of the state in which the sub-contractor is domiciled.

The Contractor shall also be protected against claims for injury, disease, or death of employees which, for any reason, may not fall within the provisions of a workers' compensation law. The Employer's Liability Insurance shall contain the following limits of liability:

Bodily Injury by Accident	$500,000 each accident
Bodily Injury by Disease	$500,000 each employee

Bodily Injury by Disease	$500,000 policy limit

GC.29.6 General Liability Insurance

This insurance shall be written per project on an “occurrence” policy form, including coverage for premises/operations, products/completed operations, blanket contractual liability, independent contractors and personal injury, with no exclusions for explosion, sudden and accidental pollution or an absolute or total pollution exclusion, collapse and underground perils. The commercial general liability policy shall also include a severability of interest clause and a cross liability clause in the event more than one entity is “named insured” or “named additional insured” under the liability policy.

Limits of Insurance shall be as follows:

Each Occurrence Limit	$1,000,000
Products/Completed Operations	$2,000,000
General Aggregate Limit	$2,000,000
Personal and Advertising Injury	$1,000,000

GC.29.7 Automobile Liability Insurance

This insurance shall be written under a Business Auto Policy and shall protect the Contractor and Additional Insureds against claims arising from injuries to members of the public or damage to property of others arising from the use of automobiles whether such automobiles are owned, non-owned, or hired. Automobile insurance shall include Motor Carrier Endorsement Act MCS 90 and transportation pollution coverage if applicable. If work is being done near a railroad track, the 50’ railroad right of way exclusion must be deleted.

Limit of Liability	$1,000,000 each accident

GC.29.8 Umbrella Liability Policy

This insurance shall protect the Contractor and the Additional Insureds against all claims in excess of the limits provided under the employer's liability, automobile liability, and general liability policies. The liability limits of the umbrella liability policy shall be not less than $5,000,000 per occurrence. This policy shall be an "occurrence" type policy. However, Purchaser reserves the right to require higher limits with respect to each project.

GC.29.9 Pollution Liability – If Applicable

Limits of at least: $1,000,000 per occurrence; $1,000,000 aggregate

If Contractor or its Sub-subcontractor's work includes but not limited to remediating, handling, processing or disposing of hazardous material including but not limited to asbestos containing materials, silica, lead, PCBs, contaminated soil, etc, coverage shall be provided for bodily injury, property damage and clean-up costs resulting for pollution conditions.

GC.29.10 Riggers Liability – If Applicable

Should work involve the moving, lifting, lowering, rigging or hoisting of property or equipment Contractor shall carry Rigger's Liability Insurance to insure against physical loss or damage to the property or equipment on a Replacement Cost Basis.

GC.29.11 Railroad Protective Liability – If Applicable

Limits of at least: As required by the railroad company

If Contractor or its Subcontractor's work includes working within a railroad right-of-way, Contractor shall carry Railroad Protective Liability Insurance to insure against physical loss or damage to the real property or any equipment located on such railroad right-of-way, on a replacement cost basis. Contractor shall name the railroad and PPGA as additional insureds, in such limits as required by such railroad company.

GC.29.12 Professional Liability – If Applicable

Limits of at least: $1,000,000 per occurrence; $1,000,000 aggregate

Policy shall provide for a retroactive date prior to the starting date of services for which this agreement applies. Policy shall not exclude damages for bodily injury, property damage, or pollution liability. Coverage shall remain in force for a minimum of 3 years following substantial completion of construction through either policy renewal or the purchase of an Extended Reporting Provision. Contractor agrees to waive its rights of recovery. Subcontractor's insurer shall endorse the policy to waive subrogation against Owner and their respective agents, officers, directors and employees.

GC.29.13 Transportation Insurance – If Applicable
Contractor shall purchase inland marine coverage at the expense of Contractor on all equipment and materials, where Purchaser has an insurable interest. Insurance shall protect for Contractor and Purchaser from physical loss of equipment while loading, unloading, in transit to jobsite, and until equipment or materials have been installed or received by Purchaser.

GC.29.14 Property Insurance A.K.A. Builder's Risk – If Applicable
Unless otherwise provided, Contractor shall purchase and maintain property insurance, a.k.a. builder's risk insurance, on the building construction project in amount thereto for entire work at site on a replacement cost basis. Such property insurance shall be maintained, unless otherwise provided in contract documents or otherwise agreed in writing by all persons and entities who are beneficiaries of such insurance, until final acceptance of work by PPGA. Insurance shall include interests of PPGA, Contractor, Subcontractor, and sub-subcontractors in work. This property insurance covering work will have deductible for each occurrence, which will be responsibility of Contractor.

Before an exposure to loss may occur, the Contractor will provide a copy of the property insurance policy or evidence of property insurance, upon request that includes all property insurance coverages.

Waivers of Subrogation: PPGA, Contractor, and all Subcontractors waive all rights against

(1) each other and any of their subcontractors, sub-subcontractors, agents and employees, each of the other, and (2) PPGA's or Contractor's consultants, separate contractors, if any, and any of their subcontractors, sub-subcontractors, agents and employees, for damages caused by fire or other perils to extent covered by property insurance obtained, or other property insurance applicable to work, except such rights as they have to proceeds of such insurance held by PPGA and/or Contractor as fiduciary. Contractor shall require of consultants, separate contractors, if any, and subcontractors, sub-subcontractors, agents and employees of any of them, by appropriate agreements, written where legally required for validity, similar waivers each in favor of other parties enumerated herein. Policies shall provide such waivers of subrogation by endorsement or otherwise. A waiver of subrogation shall be effective as to a person or entity even though that person or entity would otherwise have a duty of indemnification, contractual or otherwise, did not pay insurance premium directly or indirectly and whether or not person or entity had an insurable interest in property damaged.

GC.30 Indemnification

To the fullest extent permitted by laws and regulations, the Contractor shall defend, indemnify, and hold harmless the Purchaser, their officers, directors, members, consultants, agents, and employees from and against all claims, damages, losses, and expenses, direct, indirect, or consequential (including but not limited to fees and charges of engineers, architects, attorneys, and other professionals and court and arbitration costs) arising out of or resulting from the negligent, wrongful, or defective performance of the work by the Contractor, any sub-contractor, any person or organization directly or indirectly employed by any of them to perform or furnish any of the work, or anyone for whose acts any of them may be liable, regardless of whether or not it is caused in part by a party indemnified hereunder or arises by or is imposed by law and regulations regardless of the negligence of any such party.

In any and all claims against the Purchaser, or of any of their officers, directors, members, consultants, agents, or employees by any employee of the Contractor, any sub-contractor, any person or organization directly or indirectly employed by any of them to perform or furnish any of the work or anyone for whose acts any of them may be liable, this indemnification obligation shall not be limited in any way by any limitation on the amount or type of damages, compensation, or benefits payable by or for the Contractor or any such sub-contractor or other person or organization under workers' or workmen's compensation acts, disability benefit acts, or other employee benefit acts, nor shall this indemnification obligation be limited in any way by any limitation on the amount or type of insurance coverage provided by the Purchaser, the Contractor, or any of their sub-contractors.

GC.31 Release of Liability

Acceptance by the Contractor of the last payment shall be a release to the Purchaser and every officer and agent thereof, from all claims and liability hereunder for anything done or furnished for, or relating to the work, or for any act or neglect of the Purchaser or of any person relating to or affecting the work.

GC.32 Claims for Labor and Materials

The Contractor shall indemnify and save harmless the Purchaser from all claims for labor and materials furnished under this Contract. When requested by the Purchaser, the Contractor shall submit satisfactory evidence that all persons, firms, or corporations who have done work or furnished materials under this Contract, for which the Purchaser may become legally liable, have been fully paid or satisfactorily secured. In case such evidence is not furnished or is not satisfactory, an amount will be retained from money due the Contractor which, in addition to any other sums that may be retained, will be sufficient, in the opinion of the Purchaser, to liquidate all such claims. Such sum will be retained until the claims as aforesaid are fully settled or satisfactorily secured.

Before final acceptance of the work by the Purchaser, the Contractor shall submit to the Engineer in duplicate a notarized affidavit stating that all subcontractors, vendors, persons, or firms who have furnished labor or materials for the work have been fully paid and that all taxes have been paid. If a performance bond has been executed, a statement from the surety shall also be submitted consenting to the making of the final payment.

GC.33 Final Inspection

When the work has been substantially completed and at a time mutually agreeable to the Purchaser and Contractor, the Purchaser will make a final inspection of the work as to the acceptability and completeness of the work.

GC.34 Payments

Payment will be based on the Contractor's progress payment which he will submit to the Purchaser for approval. The Purchaser will retain five percent (5%) of the total contract amount for all work completed including change orders.

GC.35 Hazardous Materials

As required under Federal Hazardous Communications Standards and certain state and local laws, the Contractor shall provide Material Safety Data Sheets covering all hazardous materials furnished under or otherwise associated with the work under this Contract. The Contractor shall provide the Purchaser with either copies of the applicable Material Safety Data Sheets or copies of a document certifying that no Material Safety Data Sheets are required under any federal, state, or local law, regulation, statute, or ordinance in effect at the jobsite.

Hazardous materials are defined in the applicable statue which may use the terminology "toxic substances" instead of "hazardous materials." The Contractor is responsible for determining if any substance or material furnished, used, applied, or stored under this Contract is within the provisions of any applicable statute.

If the work under this Contract includes onsite construction or erection, the Contractor shall provide written notice of the presence of hazardous materials to local fire, medical, and law enforcement agencies as required with a copy of such notice to the Purchaser.

The Contractor shall provide labeling of hazardous materials and training of employees in the safe usage of such materials as required under any applicable federal, state, or local law, regulation, statute, or ordinance.

GC.36 Liquidated Damages

Time is a material provision of this Agreement. If the Contractor is unable to meet the agreed upon completion dates, the Contractor shall immediately notify the Purchaser and confirm the notice in writing within ten (10) business days of the delaying event. The notice shall contain detailed information of the delay including Contractor's estimate of the duration of the delay, Contractor's estimate of the delay's impact to Contractor's schedule and Contractor's plan to mitigate the effects of the delay.

Contractor shall be excused for delays in completion of the work only in accordance with GC.18. In the event of any such delay, Contractor shall only be allowed an extension of the date of completion for a period of time reasonably necessary to overcome the effect of the delay. Contractor shall not be entitled to any extra compensation for such delay. Contractor shall promptly notify the Purchaser in writing, with confirmation receipt of notification,

The liquidated damages amount per calendar day specified in the proposal form will be assessed, not as a penalty but as predetermined and agreed liquidated damages. The Purchaser and Contractor specifically agree the per calendar day amount to be assessed as liquidated damages is fair and reasonable and not excessive. The parties further agree that said per calendar day amount accurately reflect the anticipated loss and inconvenience to the public and lost revenue to or use by the Purchaser due to the project not being completed by the end of the project period or the end of the contract completion date.

The Purchaser shall have the right to deduct liquidated damages from any money in its hands, otherwise due, or to become due, to the Contractor; to submit invoice for payment; or to sue for and recover compensation for damages for nonperformance of this Contract within the time stipulated.

The Liquidated Damages for this project will be $500.00 per calendar day past the project completion date.

GC.37 Consequential Damages

Except for Supplier's third party obligations arising out of or liability for breach of Articles GC.26 and/or GC.30, Purchaser and Supplier will not be liable to each other for loss of profits, loss of use, loss of contracts, or consequential damages arising out of this Contract. This Section will not relieve Supplier of any obligation under GC.36.

GC.38 Limitation of Liability

With the exception of (a) indemnification stated in Article GC.30 and (b) the insurance coverages and limits set forth in Article GC.29, Supplier's total limit of liability on any claim, whether for breach of Contract, breach of warranty, tort, negligence, strict liability, or any other legal theory, for any loss or damage arising out of or connected to, or resulting from this Contract, shall be limited to the purchase price to be paid by Purchaser.

GC.39 Confidentiality

"Confidential Information" means the confidential or proprietary designs, know-how, processes, trade secrets, and other information owned or controlled by Purchaser, Engineer, or Supplier respectively. Supplier agrees to hold any Confidential Information received in the strictest confidence, shall only use the Confidential Information as necessary to perform the work. Purchaser agrees to hold any Confidential Information received in the strictest confidence and shall only use the confidential information as necessary for engineering, construction, start-up, commissioning, maintenance, or other purposes related to the project. Each party shall use the same degree of care as is used for its own information of similar importance, but no less than reasonable care.

GC.40 Work Eligibility Status

The Contractor is required and hereby agrees to use a federal immigration verification system to determine the work eligibility status of new employees physically performing services within the State of Nebraska. A federal immigration verification system means the electronic verification of the work authorization program authorized by the Illegal Immigration Reform and Immigrant Responsibility Act of 1996, 8 U.S.C. 1324a, known as the E-Verify Program, or an equivalent federal program designated by the United States Department of Homeland Security or other federal agency authorized to verify the work eligibility status of a newly hired employee.

GC.41 Fair Labor Standards

The Contractor agrees to comply with all current applicable State, Federal, and City fair labor standards in the execution of the contract. Pursuant to the Title VI Non-Discrimination Program of the City of Hastings, Contractor agrees to comply with the provisions set forth by CITY's Title VI Non-discrimination Program, if applicable. A copy of said provisions are as follows:

During the performance of this contract, the contractor, for itself, its assignees and successors in interest (hereinafter referred to as the "contractor") agrees as follows:

(1) Compliance with Regulations: The contractor shall comply with the Regulation relative to nondiscrimination in Federally-assisted programs of the Department of Transportation (hereinafter, "DOT") Title 49, Code of Federal Regulations, Part 21, and the Federal Highway Administration (hereinafter "FHWA") Title 23, Code of Federal Regulations, Part 200 as they may be amended from time to time, (hereinafter referred to as the Regulations), which are herein incorporated by reference and made a part of this contract.

(2) Nondiscrimination: The Contractor, with regard to the work performed by it during the contract, shall not discriminate on the grounds of race, color, or national origin, sex, age, and disability/handicap in the selection and retention of subcontractors, including procurements of materials and leases of equipment. The contractor shall not participate either directly or indirectly in the discrimination prohibited by 49 CFR, section 21.5 of the Regulations, including employment practices when the contract covers a program set forth in Appendix B of the Regulations.

(3) Solicitations for Subcontractors, Including Procurements of Materials and Equipment: In all solicitations either by competitive bidding or negotiation made by the contractor for work to be performed under a subcontract, including procurements of materials or leases of equipment, each potential subcontractor or supplier shall be notified by the contractor of the contractor's obligations under this contract and the Regulations relative to nondiscrimination on the grounds of race, color, or national origin, sex, age, and disability/handicap.

(4) Information and Reports: The contractor shall provide all information and reports required by the Regulations or directives issued pursuant thereto, and shall permit access to its books, records, accounts, other sources of information, and its facilities as may be determined by the (Recipient) or the FHWA to be pertinent to ascertain compliance with such Regulations, orders and instructions. Where any information required of a contractor is in the exclusive possession of another who fails or refuses to furnish this information the contractor shall so certify to the (Recipient), or the FHWA as appropriate, and shall set forth what efforts it has made to obtain the information.

(5) Sanctions for Noncompliance: In the event of the contractor's noncompliance with the nondiscrimination provisions of this contract, the (Recipient) shall impose such contract sanctions as it or the FHWA may determine to be appropriate, including, but not limited to:

(a.) Withholding of payments to the contractor under the contract until the contractor complies, and/or

(b.) Cancellation, termination or suspension of the contract, in whole or in part.

(6) Incorporation of Provisions: The contractor shall include the provisions of paragraphs (1) through (6) in every subcontract, including procurements of materials and leases of equipment, unless exempt by the Regulations, or directives issued pursuant thereto.

The contractor shall take such action with respect to any subcontract or procurement as the (Recipient) or the FHWA may direct as a means of enforcing such provisions including sanctions for non-compliance: Provided, however, that, in the event a contractor becomes involved in, or is threatened with, litigation with a subcontractor or supplier as a result of such direction, the contractor may request the (Recipient) to enter into such litigation to protect the interests of the (Recipient), and, in addition, the contractor may request the United States to enter into such litigation to protect the interests of the United States.

SECTION 2 – GENERAL DESCRIPTION AND SCOPE OF WORK

2.1 General:

The City of Hastings (Owner) is accepting bids for the installation of a new Bottom Ash Hopper Water Recirculation System for Whelan Energy Center, Unit 1 in Hastings, Nebraska. The bidder is strongly encouraged to visit with Hastings prior to submitting a bid. The Bidder shall inform themselves of all conditions and factors which would affect the execution of the work. No claims for financial compensation or time extension, based on the lack of such prior information (or its effect on the cost of the work) will be permitted by the Owner. Please contact Brandon Miller, Mechanical Engineer, at 402-462-3653 if you have any questions about this project or would like to set up a visit.

2.2 Description of System:

Whelan Energy Center, Unit 1 (WEC1) is an 82 megawatt (MW), pulverized coal-fired generating plant located near Hastings, Nebraska. The Unit began commercial operation in 1981. The existing ash sluicing systems have been replaced with dry collection systems and the current ash water pumps are being replaced with a new overflow tank, pumps, piping, valves, and other hardware. Water from the current ash water pumps is used for the bottom ash hopper slope jetting nozzles, front bottom ash hopper jetting nozzles, sluice gate door emergency jetting nozzles, and pyrite sluicing jet pump. The jetting nozzles are used to push bottom ash down the slopes of the bottom ash hopper to the clinker grinders and bottom ash submerged chain conveyor system. The new water recirculation system will eliminate the need to add service water to the bottom ash hopper and recirculate the system water for all bottom ash hopper flushing. New equipment and piping is being provided by Allen-Sherman-Hoff (B&W).

2.3 Scope of Work Performed Under This Contract:

The contractor shall perform the following scope of work:

- Demolition of existing piping and equipment:
  - Piping past valves 1ASA-BV-1022 and -1023 per drawing PT-335 Sheet 7. Existing piping interferes with location of new make-up piping.
  - Piping upstream of tee on ash water supply header to install 12” CS pipe cap. Demo only enough piping to install cap. Per drawing PT-335 Sheet 7.
  - Existing ash water pumps and associated piping will be abandoned in place
- Relocation of existing air/water reservoir 1B per drawing PT-335 Sheet 8
  - Relocate existing air water reservoir with new anchor bolts and grout under tank feet
  - Demo existing piping and fittings needed to field route new water and air piping to existing fittings
  - Solenoid valve and existing compressed air lines will be left in existing location and reused
- Installation of new B&W supplied equipment:
  - Overflow tank
  - Bottom Ash/Pyrites Pumps
  - All miscellaneous equipment per the Equipment List #225361-01-A201-01
  - All post installed anchors to be supplied and installed by contractor
- Installation of B&W provided piping, valves, and fittings per E730 series drawings:

    - Makeup Line – from existing service water piping to overflow tank
    - Bottom Ash Hopper Overflow Line – from bottom of overflow box to overflow tank
    - Overflow Tank Overflow Line – from overflow tank to existing wastewater line
    - Overflow Tank Drain Piping – from bottom of overflow tank to camlock fitting
    - Piping from tank to pumps including strainers and expansion joints
    - Piping from pumps to existing supply water header, tank flush line back to overflow tank, and minimum flow recirculation line
    - Installation of all B&W supplied valves per P&IDs
- Supply and Installation of all field routed piping, valves, and fittings
    - Compressed air line needed for air operated control valves
    - Compressed air and water lines to extend from existing to new location of air water reservoir
- Installation of all B&W supplied pipe supports per E790 and PS790 series drawings
- Installation of all B&W supplied instruments per E790 series drawings
    - Tank temperature transmitter 1ASA-TIT-1268
    - Tank level transmitter 1ASA-LIT-1269
    - Pressure gauge 1ASA-PI-1283
    - Strainer Pressure Differential Transmitter 1ASA-PDIT-1270
- Supply and Installation of pipe insulation on service water line from TP-701 to overflow tank
- System Start-Up Support:
    - Contractor shall provide labor to support testing and checkout of system. Contractor shall repair and fix items from their scope of work found to be defective during testing.
- Other scope
    - Grouting under equipment and pipe support bases as noted on drawings.
    - Painting of carbon steel pipe, ungalvanized structural steel, and other unpainted equipment as needed per section 3.10 of the technical specifications.
    - Touch-up painting on all welded connections and equipment where factory supplied top coat is damaged during installation.
    - Hydrotesting and weld inspections for all piping as specified by ASME B31.1.

2.4 <u>Work Performed by Others:</u>

The following will be performed under Contract HU 2025-101 (B&W-ASH):

- Design and supply of overflow tank, pumps, piping, valves, fittings, instrumentation, and accessories for the BA Hopper Water Recirculation System per the attached project drawings

The following will be performed under Contract HU 2026-16 (Electrical Scope):

- Supply of all electrical equipment, cables, conduit, and cable tray
- Installation of all electrical and controls cables
- Wiring of all instrumentation
- Air line tubing from air line headers to solenoid valves on control valves
-

The following will be performed under Contract HU 2025-146:

- PLC programming

Other work not included under Contract HU 2026-15:

- Installation of concrete bases for pumps

2.5 <u>Miscellaneous Materials and Services Scope:</u>

Miscellaneous Materials and Services Scope			
Item	Description	Contractor (Applies to)	Owner (Applies to)
1.	Receipt, inspection, unloading and storage of materials provided by Equipment Supplier (B&W)		X
2.	Receipt, inspection, unloading and storage of materials supplied by Contractor	X	
3.	Supply and installation of anchor bolts for contractor installed equipment	X	
4.	All hardware, welding supplies, and miscellaneous materials not provided by owner that is necessary for the completion of the work	X	
5.	Removal and disposal of all demolished equipment, piping and materials	X	
6.	Supply, installation, and removal of all temporary erection bracing, rigging, attachments and supports	X	
7.	All tooling and equipment required to perform the specified work	X	
8.	Survey and layout of the work from the Purchaser's designated control points	X	
9.	Supply of lifting equipment including cranes, man lifts, fork lifts, and telehandlers needed to complete the work	X	
10.	Supply of all work platforms including scaffolding, and OSHA required fall protection	X	
11.	Tests and inspections as required by specification	X	
12.	Supply and install grouting of equipment and column bases	X	
13.	Supply and install of touch up coatings	X	
14.	Station services including air, water, and electrical power		X
15.	Sanitary services in the form of portable toilets	X	
16.	Supply of common trash dumpster		X
17.	Clean up of work area	X	

2.6 Other Requirements:

The contractor shall comply with the following:

- All of Contractor's employees and any Sub-Contractor's employees shall take a mandatory safety orientation provided by City of Hastings before starting work on the project. The safety orientation is required once a year and is good from Jan 1 through Dec 31 each year.
- Contractor shall comply with site LOTO policy. LOTO will be performed by City of Hastings prior to starting any work on the system.
- Contractor shall comply with site Hotwork and Confined Space policies where applicable. Owner will provide Hotwork permits. Contractor is required to provide air monitors and hole watch for any confined space entry.
- Contractor shall follow all relevant OSHA regulations including fall protection and trenching and shoring. All of Contractor's employees shall use harnesses and be tied off 100% of the time when in any lift including scissor lifts.
- Weekly progress meetings between Contractor's project superintendent and Project Engineer.

2.7 Submittal Requirements:

The contractor shall submit the following information to the owner:

- Product data sheets for all contractor supplied materials.
    - Piping
    - Fittings
    - Valves
- Material test reports.
- Red-lined drawings indicating deviations from original drawing designs.

2.8 Project Schedule:

The new bottom ash water recirculation system is scheduled to be completed during the WEC Unit 1 2026 Spring outage per the dates below. The existing bottom ash hopper flushing system and ash water pumps will need to be kept in-service until the outage begins.

- Work to be completed during WEC1 Spring 2026 Outage:
    - Demolition of existing equipment and piping
    - Relocation of the air-water cylinder
    - Installation of new B&W supplied equipment
    - Installation of all new piping, valves, fittings, instrumentation
        - Tie-ins of piping to existing WEC1 systems
    - Installation of all pipe supports
    - All field painting, touch-up painting, and
- Work to be completed ahead of WEC1 Spring 2026 Outage:
    - Installation of concrete pedestals for pumps (by others)

Work will be coordinated with electrical and instrumentation contractors to allow completion during scheduled outage.

Material and Installation Contract:

Activity	Schedule
Bid Opening	Wednesday, February 18, 2026
Anticipated Contract Award Date	Monday, February 23, 2026

Preliminary Construction Schedule:

The work under this contract will have to be coordinated with City of Hastings and other Contractors to assure the Bottom Ash Water Recirculation System is completed before the end of the scheduled outage. A preliminary construction schedule is shown below.

Activity	**Schedule**
Completion of Concrete Pump Bases (by others)	Friday, March 6, 2026
Delivery of B&W Supplied Equipment	Completed by Friday, March 20, 2026
Start of Spring Outage	**Friday, March 20, 2026 at 23:59**
End of Spring Outage	**Friday, May 1, 2026 at 11:59**
Outage Mechanical Construction	Monday, March 23, 2026 through Friday, April 17, 2026
PLC Programming, Controls and System Checkout	Monday, April 20, 2026 through Wednesday, April 29, 2026

2.9 Project Drawings:

The following drawings are part of the project. Vendor drawings for materials and equipment will be supplied to Contractor before the start of work. They are also available upon request. A full set of Issued For Construction drawings will be sent to the contractor electronically via Sharepoint after contract has been signed.

Drawing No.	Revision	Description
		B&W Drawings
225361-01-4-5026	E	Pressure Gauge
225361-01-A201-01	A	Equipment List
225361-01-A204-01	A	Instrument List
225361-01-A206-01	A	Terminal Point List
225361-01-A209-01	A	Valve List
225361-01-A-5164	C	Ball Valves
225361-01-B-6026	-	Orifice Plates
225361-01-C-5682	A	Butterfly Valve Cylinder Operated
225361-01-D-8085	-	Knifegate Valves Handwheel Operated
225361-01-D-8101	-	Bi-Directional Knifegate Valves Cylinder Operated
225361-01-E145-01	A	Structural General Notes
225361-01-E189-01	A	Pipe Support General Notes
225361-01-E701-01	B	General Arrangement Recirculation Pump System

225361-01-E701-02	C	General Arrangement Recirculation Pump System
225361-01-E703-01	A	P&ID Bottom Ash Recirculation System
225361-01-E703-02	D	P&ID Bottom Ash Recirculation System
225361-01-E705-01	A	Foundation Plan Bottom Ash Hopper Overflow Tank
225361-01-E730-01	B	Erection Arrangement Recirculation Pump System
225361-01-E730-02	C	Erection Arrangement Recirculation Pump System
225361-01-E730-03	C	Erection Arrangement Recirculation Pump System
225361-01-E730-04	C	Erection Arrangement Recirculation Pump System
225361-01-E730-05	B	Erection Arrangement Recirculation Pump System
225361-01-E730-06	C	Erection Arrangement Recirculation Pump System
225361-01-E731-01	A	Hopper Flushing Nozzles
225361-01-E746-01	A	Foundation Plan Recirculation Pump System
225361-01-E790-01	B	Pipe Support Location Plan
225361-01-E790-02	A	Pipe Support Location Plan
225361-01-E790-03	A	Pipe Support Location Plan
225361-01-PS790-001	A	Pipe Support Details
225361-01-PS790-002	B	Pipe Support Details
225361-01-PS790-003	B	Pipe Support Details
225361-01-PS790-004	B	Pipe Support Details
225361-01-PS790-005	A	Pipe Support Details
225361-01-PS790-006	A	Pipe Support Details
225361-01-PS790-007	A	Pipe Support Details
225361-01-PS790-008	A	Pipe Support Details
225361-01-PS790-009	A	Pipe Support Details
225361-01-Paint	B	Paint Specification
City of Hastings Drawings		
PT-335-07	-	Demolition Details
PT-335-08	-	Air Water Separator Relocation Plan
PT-335-09	-	Air Water Separator Details
PT-335-10	-	Compressed Air Piping Plan
PT-335-11	-	P&ID M1016 Compressed Air
PT-335-12	-	P&ID M1017A Compressed Air

SECTION 3 – Technical Specifications

3.1 Demolition of Existing:

3.1.1 General:

Demolition of existing piping and equipment will be needed to route new pipe provided by B&W. This demolition work will have to be done during the spring outage period since the service water system will remain in operation until outage. LOTO of existing system will be performed by City of Hastings prior to beginning of demolition work. Care should be taken to prevent damage to parts of plant and equipment that are staying in service.

3.1.2 Equipment to be Demolished:

The following equipment and piping are to be demolished:

- Piping, valve, and fittings upstream of valves 1ASA-BV-1022 and 1ASA-BV-1023 per PT-335-07.
- Piping upstream of tee on ash water header. Demo only enough piping to install 12" CS Buttweld Cap on supply line from ash water pumps. The rest of the piping and ash water pumps will be abandoned in place per PT-335-07.
- Piping and fittings needed to relocate Air-Water Reservoir 1B. Demo only piping and fittings necessary to field route new piping to new location. Existing solenoid valve CAA-1048 to remain in place. Per drawing PT-335-09.

3.1.3 Reference Drawings:

The following drawings show equipment and piping is to be demolished:

- PT-335-07
- PT-335-09

3.2 Equipment Installation:

3.2.1 General:

Contractor shall install equipment supplied by B&W as indicated on the drawings and equipment lists. Erection procedures shall be in accordance with the recommendations of the equipment manufacturers. Equipment shall be checked prior to its installation to ensure that it is in conformance with the manufacturer's drawings. Any discrepancies shall be reported to the Purchaser. If the equipment to be erected by the Contractor is shipped unassembled, the complete assembly of such equipment shall be part of the work included under these specifications. Setting and all other erection work for this equipment shall be performed under this section.

3.2.2 Equipment to be installed:

The equipment to be installed under this contract includes but is not limited to:

- 701 – Overflow Tank
- 702 – Pump and Motor (2 x 100%)

Installation shall include all accessories and hardware associated with this equipment.

3.2.3 Location Tolerances:

All equipment shall be located within 1/4" of the dimensioned locations indicated on the drawings.

3.2.4 Leveling and Grouting:

The metal bases of all equipment installed under these specifications shall be grouted in place in accordance with the project drawings, equipment manufacturer's instructions and recommendations when available.

Prior to placing of grout, each base shall be set in place over its anchor bolts and shall be carefully aligned in proper position and then brought to accurate level, preferably by means of leveling screws with nuts above and below temporary lugs attached to the edges of the base. Steel shims may be used for leveling small bases, if permission is given by the Purchaser. Such shims shall be of a type that cannot be easily or accidentally dislodged. The use of wood blocking or wood wedges to hold the base in position will not be permitted.

3.2.5 Equipment Checkout:

All equipment shall be cleaned. Rotating machinery shall be lubricated and checked for freedom of movement by hand if possible, and all prerequisite operating conditions shall be established before the application of motive power. Equipment subject to pressure shall be checked for leakage.

3.2.6 Defects:

All defects in erection shall be corrected to the satisfaction of the purchaser. The dismantling and reassembly of Supplier-furnished equipment to remove defective parts, replace parts, or make adjustments shall be included as a part of the work under these specifications.

3.3 Piping Supply:

3.3.1 Piping Scope of Supply:

Scope of supply shall include all compressed piping from existing plant system to overflow tank area. This includes the piping, valves, and fittings from the compressed air tie-in to the end of the branch line. Each individual solenoid valve shall have its own isolation valve per PT-335-11 and PT-335-12. All piping 2" and smaller shall be field routed. All piping, valves, and fittings shall be compatible with existing plant piping materials as shown in section 3.3.3.

All other piping shown on B&W drawings is supplied by B&W from tie-in points indicated to new recirculation system.

3.3.2 Piping Isometric, Plan, and Section Drawings:

All piping 2" and smaller shall be field routed by the contractor. This includes the Compressed Air (CAA – service air and CAB – instrument air) system piping from existing plant piping to equipment at the overflow tank and water and compressed air piping from existing system to relocated air water reservoir.

All B&W piping shall be installed per B&W piping erection arrangement drawings E730-01 through E730-06.

3.3.3. Existing Plant Materials:

Existing plant piping materials are shown by system code on the pipeline listing attached in the drawings section.

3.3.4 Piping Codes and Standards:

Work performed under these specifications shall be done in accordance with the following codes and standards. Unless otherwise specified, the applicable governing edition and addenda to be used for all references to codes or standards specified herein shall be interpreted to be the jurisdictionally approved edition and addenda. If a code or standard is not jurisdictionally mandated, then the current edition and addenda in effect at the date of this document shall apply. These references shall govern the work except where they conflict with the Purchaser's specifications. In case of conflict, the latter shall govern to the extent of such difference:

Work	**In Accordance With**
Materials for piping and application of piping materials	The most current edition of the ASME Code for Pressure Piping, B31.1, Power Piping, including all addenda thereto
Sizes, schedule numbers, and dimensions of carbon steel and alloy steel pipe, and stainless steel pipe schedules not covered by ANSI B36.19M	ASME B36.10M
Wall thickness tolerances for carbon steel and alloy steel pipe	ASTM A530

Work	In Accordance With
Butt weld fitting manufacturing standard	ASME B16.9 and ASME B16.28
Socket-weld and threaded forged steel fittings manufacturing standard and minimum pressure class ratings	ASME B16.11
Carbon steel flanged fittings	ASME B16.5
Welding adapters	Paragraph 104.3 of ANSI/ASME B31.1
Socket weld fittings for use with stainless steel tubing	ASME B16.11
Braze joint fittings for use with copper tubing	ASME B16.22
Steel flange construction requirements	ASME B16.5
Compressed fiber gaskets and rubber gaskets	ASME B16.21
Ring joint gaskets	ASME B16.20
Flange bolting requirements - alloy steel bolting	ASME B16.5
Flange bolting requirements - carbon steel bolting	ASME B16.1
Carbon steel bolting dimensional standards	ANSI B18.2.1 and ANSI/ASME B18.2.2

3.3.5 <u>Piping Materials:</u>

All pipe shall be in accordance with the applicable codes and standards as designated in this section and the attachments thereto. Contractor shall submit from material supplier factory tests showing conformance to specified standards. Material substitutions shall not be made without written approval by the purchaser. The following materials shall be used:

Component	Material
Steel pipe	
Carbon steel	CAA-A system: ASTM A53 GR B ASA-A system: ASTM A53 GR B WSA-A system: ASTM A53 GR B
Carbon steel flange material standards, ANSI Pressure Classes 150 and 300	ASTM A181/A181M or ASTM A105/A105M
Carbon steel flange material standards, ANSI Pressure Class 600 and higher	ASTM A105/A105M

Component	Material
Carbon and alloy steel butt weld fitting material standards	ASTM A234/A234M
Carbon steel bolting materials	ASTM A307 Grade B, ASTM A563 Grade A Heavy Hex Nuts
Alloy steel bolting materials	ASTM A193 Grade B7, ASTM A194 Grade 2H Heavy Hex Nuts

3.3.6 Steel Pipe:

Steel piping shall be provided per the standards in sections 3.3.5.

3.3.7 Valves:

Valves shall be provided per the standards in sections 3.3.4, and drawings PT-335-10/11/12. Airline isolation valves shall be ½" carbon steel ball valves.

3.3.8 Pipe Fittings:

Contractor shall supply all fittings to provide a complete installation. Unless otherwise indicated on the attachment(s), steel fittings used shall be socket welded fittings and threaded steel fittings as specified in the drawings. Forged steel fittings shall be used for socket-welded and threaded connections. Socket-welded and threaded fittings shall conform to the applicable standards listed in 4.3.4. Metal thicknesses of fittings shall be adequate to provide actual bursting strengths equal to or greater than those of the pipe with which they are to be used. Minimum pressure class rating of socket-welded and threaded fittings shall be in accordance with the applicable standard listed in 3.3.4.

3.3.9 Piping Flanges:

Flanges shall conform to applicable standards indicated in 3.3.4. Unless otherwise specified, flanges shall be as follows:

For the case where the Contractor determines flanges to be furnished based on attached drawings or based on the Contractor's overall design, flanges mating with flanges on piping, valves, and equipment shall be of sizes, drillings, and facings that match all connecting flanges. Flange class ratings shall be adequate to meet the design pressure and temperature specified in the attachment(s) for the piping with which they are used. Flange materials shall be equivalent to the pipe with which they are used.

3.3.10 Gaskets:

Gaskets shall be furnished as indicated on the attachment(s). Gaskets shall be red rubber (SBR) or neoprene. Unless otherwise specified full face type gaskets shall be used with flat face flanges and raised face ring type gaskets shall be used with raised face flanges. Gaskets containing asbestos are not acceptable.

3.3.11 Flange Bolting:

Alloy steel bolting shall be used for joining all steel flanges having a design pressure rating of Class 150 or greater, except steel slip-on flanges.

Carbon steel bolting shall be used for joining all other flanges including steel slip-on flanges.

Bolting for bolt diameters 1-3/4 inches (45 mm) and larger shall consist of threaded studs and two nuts. Bolting for bolt diameters less than 1-3/4 inches (45 mm) may be threaded studs and nuts or bolts and nuts. Bolts and nuts shall be heavy hexagonal heads conforming to the standards listed in 3.3.5.

3.3.12 Unions:

All piping unions shall be of the ground joint type constructed of materials equivalent in alloy composition and strength to other fittings in the piping systems in which they are installed. Union pressure classes and end connections shall be the same as the fittings in the piping systems in which they are installed.

3.4 Piping Erection:

3.4.1 Piping Erection Scope of Work:

The work shall include erection of all piping, fittings, valves, supports, and piping specialties, as called for on the drawings and specifications, and by the codes and standards. This includes all materials furnished by the Overflow tank material supplier and those furnished by The Contractor. The Contractor shall furnish all required materials and perform all related work for completion of the work included under these specifications unless specifically stated that item is Purchaser supplied.

Scope of Work	**Scope of Work for this package includes the following items:**		
System Name	**System Code**	**Category ***	**Material Supply**
Bottom Ash	ASA	2	By Purchaser
Service Air Piping	CAA	2	By Contractor
Instrument Air Piping	CAB	2	By Contractor
Service Water Piping	WSA	2	By Purchaser
*Categories are as follows: 1. Hot (300°F and above operating temperature) piping system. 2. Cold (below 300°F operating temperature) piping system.			
The systems listed above include the following:			
Above grade piping	Yes		
Below grade piping	No		
Scope of Work includes the following services and materials:			
Routing of miscellaneous 2 inch (50 mm) and smaller pipe, fittings, and valves	Yes (Field routed by Contractor. Purchaser to approve of routing. Suggested routing and tie-in points shown on drawings)		
Pressure testing of piping erected under these specifications	Yes-Pneumatic Leak Test		
Hydrostatic testing of the following piping systems erected by others:			
Furnish water for hydrotest	N/A		
Furnish chemicals for treatment of hydrotest water	No		

Furnish and install piping insulation and lagging	Yes – make-up water piping to overflow tank only see drawing PT-335-10
Provide penetrations of structures for piping	Yes

3.4.2 Piping Erection Codes and Standards:

Work performed under these specifications shall be done in accordance with the following codes and standards. Unless otherwise specified, the applicable governing edition and addenda to be used for all references to codes or standards specified herein shall be interpreted to be the jurisdictionally approved edition and addenda. If a code or standard is not jurisdictionally mandated, then the current edition and addenda in effect at the date of this document shall apply. These references shall govern the work except where they conflict with the Purchaser's specifications. In case of conflict, the latter shall govern to the extent of such difference:

Work	In Accordance With
Piping Erection	ASME B31.1 Code for Pressure Piping ASME Boiler and Pressure Vessel Code

3.4.3 Piping Erection Execution:

All piping, valves, and fittings shall be erected in accordance with the requirements of this section and notes contained on B&W drawings. Any piping installation not specified herein shall be done in accordance with good engineering practice.

The drawings indicate the dimensions of the major lines. These dimensions are subject to change to accommodate the equipment, valves, and fittings actually furnished and the variations in equipment as actually installed. If the equipment, valves, fittings, and other components of the piping systems actually furnished differ in dimensions from those indicated, the piping systems shall be altered as required to accommodate these changes. If, due to some unforeseen circumstance, the installation of the piping as indicated would result in an interference, the modifications or corrections required to install the piping free from interferences shall be made.

A field check of all connections to equipment and existing pipe, valves, or fittings for location, size, butt weld end preparation or flange drilling and facing shall be made prior to erecting interconnecting piping.

Allowances in fit-up and modifications to piping spools shall be made as required prior to completion of field welds and hoisting pipe spools into place as applicable.

Pipe, fittings, valves, and accessories shall be handled in a manner that will ensure installation in a sound, undamaged condition. Equipment, tools, and methods used in unloading, reloading, hauling, and laying pipe and fittings shall be such that the pipe and fittings are not damaged.

Particular care shall be taken to prevent damage to protective coatings. Slings shall be nonabrasive and located between the ends of each pipe section when lifting. Bare wire rope slings or the use of hooks to lift pipe will not be permitted.

3.4.4 Welding:

Field welding shall be in accordance with the requirements of the General Welding Section 3.5 of this specification. All piping welds and piping support welds will be visually inspected for cracks, undercutting, lack of fusion, incomplete penetration (if possible), surface porosity.

3.4.5 Piping Routing:

Piping routing and tie-in points shall be done according to the provided drawings. Special attention shall be given to securing a neat appearance. All piping shall be installed perpendicular or parallel to the major equipment, building structure, and floor levels except in special cases consented to by the Purchaser.

Pipe routing shall allow unobstructed maintenance of existing plant equipment, including maintenance pull spaces shown on the drawings. Pipe shall not interfere with operation of existing plant equipment including overhead cranes and access doors.

Valves shall be installed in such a manner that they can be operated from the main operating floors or platforms without the use of ladders or special operating devices where able.

Sketches of the proposed routing of all piping not located on the drawings shall be submitted to the Purchaser. The Purchaser's acceptance of all routings shall be obtained before the piping is erected. Approximate tie-in points are shown on the drawings but final location should be determined during routing of pipe.

3.4.6 Piping in Existing Areas:

Before installation of piping in existing areas, the routings of new piping to be installed shall be walked down to verify that the piping, insulation, and supports can be installed as designed without interference. If the piping as designed would interfere with existing facilities, the pipe routing shall be reviewed with the Purchaser and shall then be altered or existing piping shall be relocated. All pipe routings shall be subject to acceptance by the Purchaser.

3.4.7 Thermal Expansion:

All piping shall be installed so that excessive or destructive expansion forces will not exist either in the cold condition or under conditions of maximum temperature.

3.4.8 Piping Supports:

All Pipe supports shall be installed by Contractor per the project drawings where specified. Pipe supports or hangers shall be provided and installed for all field routed piping. In all cases Contractor shall provide support to limit unsupported lengths of pipe to that suggested in ASME B31.1 Table 121.5. Support materials shall be installed level and square to piping and existing structure to be attached to. The use of standard support assemblies is allowed and recommended. Pipe supports shall not allow for excessive sag in piping or create excessive deformation due to misalignment.

Welding of pipe supports to structural steel forming a part of the building supporting structure shall be in accordance with the following. Welds shall run parallel with the length of the beam and all welding of lugs or attachments shall be staggered on the sides, with cooling allowed between subsequent weld bead deposits. Loaded beams shall be unloaded or properly shored

prior to field welding if 10 percent or more of the flange width or web depth should be heated to over 500° F (260° C) at any one time.

Pipe supports shall utilize standard support materials when possible. Support designs shall minimize required field welding. “Bolt-on” materials such as beam clamps, pipe clamps, and threaded hanger rods are encouraged.

3.4.9 Cutting and Drilling Structures:

All necessary drilling, cutting, and patching of structures required for proper installation of piping or bolts shall be done, but only as indicated on the drawings, specified herein, or with the consent of the Purchaser. Any penetrations provided by others are shown on the drawings.

Holes cut in walls and roofs shall be complete with sleeves, collars, panel edge closures, reinforcing, flashing, and other accessories in accordance with the details indicated on the drawings. Hole size shall be drilled large enough to allow for expected expansion and contraction.

Field cut holes through walls or roof shall be done with proper cutting equipment, leaving a clean finished edge. Burning or other nonexact methods shall not be used.

Holes shall not be cut in structural steel. Wherever possible, clamps shall be used for attaching erection rigging. Lugs may be welded to structural steel only with the consent of the Purchaser. Upon completion of the work, the lugs shall be removed and the surfaces ground smooth.

Holes cut in grating or floor plate shall be banded and reinforced in accordance with the details indicated on the drawings, if details are provided. If no details are indicated on the drawings, holes cut in floor grating shall be banded with 1/4 inch (6 mm) steel bands or standard weight steel pipe welded to the main carrying bars. The bands shall extend the full depth of the grating and shall project 4 inches (100 mm) above the top of the grating.

If normal grating support is removed by the cutting of holes, the Contractor shall add miscellaneous angles or other steel as required to properly support the grating.

All openings in concrete shall be made by core drilling, saws, or similar clean cutting equipment.

All field cut holes and sleeves shall have adequate provisions to allow for insulation and expansion of piping as required.

Field cut holes through walls or roof shall be performed with proper cutting equipment, leaving a clean finished edge. All holes in walls or roofs shall be complete with sleeves, collars, panel edge closures, reinforcing, flashing, and seals.

3.4.10 Equipment Connections:

When attaching piping to equipment connections, special care shall be taken so that excessive stresses are not transmitted to, and imposed upon, such connections.

In the case of flanged connections, the piping shall be installed and supported so that accurate matching of bolt holes and uniform contact over the entire flange area are obtained prior to the installation of any flange bolts. Bolts shall be carefully tightened to uniformly compress the gaskets and minimize flange stress.

Fit-up of the flanges to equipment connections may be checked after the bolting has been installed at the request of the Project Field Manager. Such bolting shall be removed and replaced and new gaskets installed if requested by the Purchaser.

Final alignment checks and manufacturer representative's acceptance of connection alignment shall only be performed with all travel stops in place and all temporary supports removed. Making up of the welded joints on the conveyor system shall be done in strict accordance with the equipment manufacturer's requirements. It shall be the Contractor's responsibility to determine the manufacturer's requirements from the provided drawings.

After startup, if the connecting piping is found to be exerting excessive strains on the equipment, the piping shall be altered by adjusting the piping supports, cutting and rewelding joints, and removing sections of piping, all as necessary to eliminate the excessive strains.

3.4.11 Valve Installation:

Excessive piping strains and bending moments on valves shall be avoided. Excessive strains and moments will result in distorted valve seats. Valve should be checked for any debris that may prevent operation prior to final installation.

3.4.12 Making Flanged Connections:

The faces of all flanges and gaskets shall be wiped clean when making up flanged joints. The contact faces of all flanges shall meet squarely, and particular care shall be exercised in pulling up flanged joints to prevent overstressing of flanges or flange bolting.

The threads of all bolting shall be painted with a suitable thread lubricant before the joint is made. The lubricant shall be suitable for the operating temperatures involved.

3.4.13 Miscellaneous Small Connections:

All openings for vents, drains, instruments, and other similar connections made after erection of the piping systems shall be drilled. No burning of such openings will be permitted. Connections shall be made in accordance with the details indicated on the drawings. Any burrs remaining on the inside wall of the pipe after drilling shall be removed.

3.4.14 Damage to Machined Surfaces:

Special measures shall be taken to avoid damage to machined surfaces such as flange facings or pipe ends that have been prepared for welding. Any damage to welding ends shall be repaired prior to butting up for welding. If a flange facing is marred, scratched, or damaged to such an extent that, in the opinion of the Purchaser, the flange will be a cause for leakage, such flange shall be repaired or replaced.

When welding to equipment that is in the assembled condition, separate ground leads shall be attached to the equipment, pipes, or components to prevent stray welding currents from arcing the internals of the equipment. Wherever possible, the ground lead shall be 2/0 cable or larger directly and mechanically connected adjacent to the welding area and returned directly to the welding power source.

3.4.15 Penetration Seals:

Penetration seals shall be furnished and installed on piping that passes through walls and floors where indicated on the drawings.

Seals shall be designed for any expected axial and lateral movements.

For penetrations through corrugated steel building panels utilize the following:

Sealing method shall utilize EPDM rubber flashing boot with formable metal strip for molding to existing panel profile. DEKS Dektite roof flashing components or approved equal shall be utilized for wall penetrations though steel building panels. EPDM flashing boot shall be correct size for piping and shall provide tight fit around pipe diameter. Silicone shall be applied at the pipe and the building panel interface according to the manufacturer's recommendations.

For penetrations through concrete or masonry walls utilize the following:

Hole shall be core drilled slightly larger than pipe diameter to allow for pipe movement. Gaps shall be sealed with expanding insulation.

Seals shall be installed and sealed in accordance with the manufacturer's installation instructions.

3.4.15 <u>Pressure Testing:</u>

Contractor will be responsible for the tests listed below of newly installed piping.

Compressed air lines will be subjected to an In-Service Leak Test (ISLT) according to the following.
Cycle: Pressurize the entire pipe to the rated pressure five (5) times, holding at rated pressure for five (5) minutes and at zero (0) pressure for five (5) minutes during each cycle. This requirement for cycling is in addition to ASME B31.1 requirements.

Hold: Pressurize the entire pipe to the specified test pressure and hold at this pressure for two (2) hours.

Test: Reduce pressure to specified design pressure and walk down the entire system to check for leaks. A liquid with foaming agent applied to all joints may be used to aid in leak determination. In the event of repair needed all liquid shall be cleaned prior to beginning repair work.

Repair: If any leaks are found, they shall be repaired per manufacturer's recommendations and the entire process specified above shall be repeated until the entire system is demonstrated to be leak free.

Water and air lines shall be pneumatically pressure tested for leaks. Contractor shall install blind flange at either end with airline connection to one of the flanges to allow for pressurization. Tests shall not commence until pressure is established at or above the prescribed test pressure and the pressurizing source has been disconnected from the system. The pressure decay shall be zero for a period of 10 minutes. Should pressure decay occur, the test pressure shall be reduced to design pressure and the system checked for leaks. The test shall be repeated after the system defects have been repaired. A liquid with foaming agent applied to all joints may be used to aid in leak determination. In the event of repair needed all liquid shall be cleaned prior to beginning repair work.

3.4.16 Cleaning of Pipe:

The inside and outside surfaces of all pipe, tubing, valves, and fittings shall be cleaned of all dirt, sand, loose mill scale, and other foreign materials immediately after removal from storage and before erection. All lines shall be thoroughly flushed or blown before being placed in service. All compressed air lines shall be air blown.

3.4.17 Final Adjustment:

After a period of initial operation, all flange bolting shall be checked for tightness, and all hangers readjusted.

3.5 Welding:

3.5.1 General Welding Requirements:

Unless otherwise specified, the applicable governing edition and addenda to be used for all references to codes or standards specified herein shall be interpreted to be the jurisdictionally approved edition and addenda. If a code or standard is not jurisdictionally mandated, then the current edition and addenda in effect at the time of (contract or specification) approval shall govern.

For the purposes of this contract the following codes shall apply:
ASME B31.1
ASME Boiler and Pressure Vessel Code
MSS SP-58 for pipe support welding

All piping under this contract shall fall under the P-1 classification.

Where requirements of a referenced code or standard differ the more stringent or restrictive requirements shall apply.

Any request for deviation from specified requirements shall be submitted in writing and shall include the proposed deviation, rationale for the deviation, any technical data supporting the deviation, and historical experience supporting the deviation.

3.5.2 Welding Processes:

Unless otherwise specified, only shielded metal arc welding (SMAW), gas metal arc welding (GMAW), flux cored arc welding (FCAW), submerged arc welding (SAW), plasma arc welding (PAW), stud welding, and gas tungsten arc welding (GTAW) processes shall be permitted. Other welding processes may be used, provided the governing code or standard permits it and written approval has been granted by the Purchaser.

3.5.3 Welding Procedure Qualification:

Welding procedures shall be prepared and qualified in accordance with ASME Section IX except as modified by ASME B31.1.

Welding Procedure Specifications (WPS) and applicable Procedure Qualification Records (PQRs) shall be submitted for review by the Purchaser prior to start of fabrication. Submittal of welding procedures and applicable PQRs shall apply to all Contractors and subcontractors. Contractors shall review the documents in accordance with the applicable code and specification requirements and shall accept all of their subcontractors' welding procedures and applicable PQRs prior to submitting accepted documents to the B&V Materials Applications Section.

Due to the number of different nickel alloys within a nickel alloy P-number or S-number, WPSs for welding P-number or S-number 41 through 49, nickel alloy materials should identify the base materials by the Unified Numbering System (UNS) to aid in the proper application of the WPS, e.g., P45 (UNS N08367). As an alternative to identifying the UNS number on the WPS, the UNS number of the base material from the WPS may be cross referenced to the WPS by other means.

Standard Welding Procedure Specifications (SWPSs) produced by the American Welding Society (AWS) may be used when permitted by the jurisdictional code. Any supplemental requirements mandated by the jurisdictional code shall be met.

3.5.4 Welder/Welding Operator Performance Qualification:

Welders and welding operators shall be qualified in accordance with ASME Section IX except as modified by ASME B31.1. The welder and welding operator qualification records shall be available at the shop facility or construction site and shall be made available for review when requested and prior to start of work.

Each manufacturer or contractor is responsible for the qualification of welders or welding operators. Field welder or welding operator performance qualification testing shall be performed under the full supervision and control of the manufacturer or contractor at the project site or approved offsite testing facility prior to start of work.

3.5.5 United Association (UA) Welder Qualification:

Welders qualified and certified in accordance with the United Association (UA) Welder Qualification Program may be permitted to perform welding at the project construction site without further testing, provided the following requirements are met:

The UA Welder Qualification Program has been approved by state authorities and clients. Documentation of the UA Welder Qualification Program acceptance by the state jurisdiction and client shall be submitted to B&V Materials Applications Section and the Purchaser prior to permitting implementation of the program.

The UA Welder Qualification Program shall not be accepted for ASME Section I, boiler proper and ASME B31.1, boiler external piping. This program is applicable only for ASME B31.1, nonboiler external piping.

Project construction site personnel shall be provided with the applicable UA Welder Performance Qualification Test Record and the UA Welder's Record of Continuity as specified by ASME B31.1, Paragraph 127.5.3 (B).

If the provided documentation is acceptable, project construction site personnel shall prepare and sign a welder performance qualification record accepting responsibility for the ability of the welder in accordance with ASME B31.1, Paragraph 127.6.

3.5.6 Weld End Preparation:

Pipe ends for socket-weld connections shall be reamed to full inside diameter to remove all burrs and obstructions and to ensure proper assembly in accordance with ASME B31.1, Paragraph 127.3(E).

When weld joint details are specified by design documents, they shall be prepared in accordance with design documents.

3.5.7 Filler Materials:

Welding filler metal shall comply with the requirements of the referenced code and any modified requirements specified herein. The filler metal shall be as specified in the applicable WPS.

Unless otherwise specified, the welding filler metal shall have a chemical composition as similar as possible to the base materials to be welded. The finished weld as deposited, or after postweld heat treatment (PWHT) when required, shall be at least equal to the base metal as to strength, ductility, notch toughness, corrosion-erosion resistance, or other physical or thermal properties.

Unless otherwise approved in writing, the GTAW process shall require the addition of filler metal.

Unless otherwise specified, the use of the -G electrode/wire classification is prohibited.

SAW multipass weld deposits shall use an essentially neutral flux. Alloy, semiactive, or active fluxes shall not be used except as specified otherwise. Fluxes that compensate for losses of alloying elements are permitted. Active flux may be used for single pass welding of carbon steels, provided the weld deposit thickness is approximately 1/4 inch (6 mm) maximum each side for a double-V-groove joint design or approximately 1/4 inch (6 mm) one side for a single-V-groove joint design. The joint thickness shall not exceed 1/2 inch (13 mm) nominal.

The SAW process shall not use recrushed slag.

SMAW low-hydrogen type electrodes, including stainless steel and nickel and nickel alloy electrodes, shall be purchased in hermetically sealed or vacuum packed containers only.

3.5.8 Filler Material Control:

Storage, handling, and drying of SMAW electrodes and SAW flux shall, as a minimum, be in accordance with the manufacturers' recommendations. In addition, SMAW low-hydrogen type carbon and low alloy steel electrodes shall be stored in ovens at 250° F (120° C) minimum after the hermetically sealed or vacuum packed container is opened. Bare rod in straight lengths shall be individually flag tagged, stamped, or otherwise identified with the AWS classification or product classification. Each spool of solid or cored rod shall be tagged, labeled, or otherwise identified with the AWS classification or product classification. SMAW low-hydrogen type covered electrodes shall only be reconditioned one time. Any SMAW low-hydrogen type electrodes that have been wet or have damaged coatings shall not be used. Any welding filler metals or fluxes not readily identifiable shall not be used.

3.6 Fabrication Controls:

3.6.1 Welding Preheat and Interpass Temperature:

The preheat and interpass temperature requirements are essential variables and shall be in accordance with the referenced code and as specified herein. The WPS for the material being welded shall specify the minimum preheat and maximum interpass temperature requirements. The thickness used to determine preheat requirements shall be the thickness of the thickest part at the point of welding. Preheating shall be applied prior to any welding or thermal removal process.

Preheat and interpass temperatures shall be monitored and checked by temperature indicating crayons, thermocouples, surface contact pyrometers or thermometers, or other suitable methods.

Preheating shall be performed using electric resistance, induction heating, or oxyfuel heating methods that will provide uniform heating over the complete weld or thermal removal process area.
Preheat of pressure retaining components for carbon steel P-number 1 or S-number 1 materials shall be 175° F (79° C) when the material specified carbon content is in excess of 0.30 percent and the nominal thickness at the joint is in excess of 1 inch (25 mm). In addition, 200° F (93° C) minimum preheat is required for nominal thickness over 1.25 inches (32 mm), regardless of carbon content. A minimum preheat temperature of 50° F (10° C) is required for all other carbon steel P-number 1 or S-number 1 materials.

3.6.2 Miscellaneous Fabrication Control Requirements:

Welding shall not be performed when surfaces of the parts to be welded are wet. The parts to be welded shall be protected from deleterious contamination and from rain, snow, and excessive wind during welding.

Prior to welding, the weld preparation and adjacent base material surfaces shall be cleaned and kept free from paint, oil, grease, dirt, scale, rust, and other foreign materials.

The weld end preparation on carbon and low alloy steel materials that will be stored for extended periods of time may consist of coating with deoxaluminate or an equivalent protective material. This coating may be welded through if applied within the manufacturer's maximum weldable limit of 1.25 mils. Complete removal of the coating is neither required nor prohibited, unless signs of rust or other foreign materials such as oil, grease, dirt, or excessive coating are apparent, in which case these areas shall be cleaned.

Acceptable cleaning solvents include new or redistilled acetone (acetone reclaimed by other methods shall not be used), alcohol (ethyl, methanol, or isopropanol), methyl ethyl ketone, or toluene (toluol). Halogenated cleaning solvents shall not be used for cleaning or degreasing.

All groove butt joints shall be complete joint penetration unless specified otherwise by design documents or the applicable code.

Complete penetration joints welded from both sides shall have the root of the first layer or pass chipped, gouged, ground, or machined to sound metal prior to welding from the second side.

Welded joints shall be made by completing each weld layer before succeeding weld layers are deposited. Partial fill passes are permitted to correct localized underfill conditions and for the purpose of maintaining alignment. Block welding is prohibited.

As-welded surfaces are permitted; however, the surfaces of welds shall be uniform in width and size throughout their full length. The cover pass shall be free from coarse ripples, grooves, overlaps, abrupt ridges, and valleys. The surface condition of the finished welds shall be suitable for the proper interpretation of nondestructive examination. If the surface of the weld requires grinding to meet the above criteria, care shall be taken to avoid reducing the weld or base material below the minimum required thickness.

All socket welds shall be welded using only the GTAW or SMAW welding processes and shall meet the following requirements:

A minimum of two weld layers is required for pipe or tube over 1/2 inch (13 mm) nominal pipe size. Either GTAW or manual SMAW processes may be used.

For pipe or tube 1/2 inch (13 mm) or less in nominal pipe size, the GTAW process should be used and a single weld layer is permitted. The SMAW process may be used provided a minimum of two weld layers is deposited.

Welding slag and spatter shall be removed from all welds.

A gas or gas mixture used for shielding shall be welding grade or shall meet Specification SFA-5.32 and have a dew point of -40° F (-40° C) or lower.

Fabricators and Contractors shall check for residual magnetism at each end of the machined field pipe weld bevels. Weld bevels containing residual magnetism greater than 5 gauss shall be demagnetized.

Arc strikes outside of the area of permanent welds should be avoided on any base metal. Cracks or blemishes caused by arc strikes shall be ground to a smooth contour and checked to ensure soundness.

Peening is prohibited. The use of power tools for slag removal is not considered peening.

The application of heat to correct weld distortion and dimensional deviation without prior written approval from the Purchaser is prohibited.

Temporary attachments to pressure boundary components should be avoided and only used when absolutely necessary. When required, clamps, welded clips, tack welds, or other appropriate means shall be used to properly align the joint for welding. Welded attachments used for fit-up shall be compatible with the base material and shall be welded with a qualified welding procedure. Attachments shall not be knocked off base material. The attachments shall be removed by suitable methods, such as grinding, machining, or sawing, followed by grinding flush with the base material. When thermal cutting is used to remove attachments, approximately 3/16 inch of material shall be left for final removal by grinding. The ground area shall then be visually examined for defects. The area from which attachments have been removed shall be examined as required by the governing code or specification. Any defects found shall be repaired.

All defects in welds or base materials shall be removed and repaired in accordance with the referenced code.

Welding machine ground leads and clamps shall be located to avoid passing welding current through equipment, snubbers, bearings, or any other items where transfer of electrical current may result in damage to equipment.

A complete repair procedure for repairs that are documented as the basis of a nonconformance report shall be submitted to the Purchaser for review and approval in writing prior to performing the repair. If repair by welding is required, the applicable WPSs and supporting PQRs shall be submitted with the repair procedure. All nonconformance report dispositions shall comply with applicable code requirements.

3.6.3 Nondestructive Examination (NDE):

The Contractor shall conduct visual inspection of all piping and pipe support welds for cracks, undercutting, lack of fusion, incomplete penetration (if possible), surface porosity. If deemed necessary the Contractor shall hire an independent contractor to handle all of NDE tests and associated cost. Repair of defective welds and reexamination shall be at the Contractor's expense. Weld acceptance standards shall be in accordance with applicable codes and design specifications. If an individual interpretation is in question, the final authority shall be the responsibility of the Purchaser

NDE shall be performed in accordance with written procedures that are prepared in accordance with the referenced code and as specified herein.

NDE personnel performing NDE other than visual shall be qualified and certified for the applicable NDE method. Personnel shall meet written practice ASNT SNT-TC-1A, unless permitted otherwise by the referencing code. NDE personnel qualification records shall be made available for review when requested.

Personnel performing or supervising the visual examination of welds, including ASME Boiler and Pressure Vessel components, shall be qualified as a Certified Welding Inspector (CWI) in accordance with the American Welding Society AWS QC 1 or previously approved equivalent program. Visual inspectors' qualifications and certificates shall be submitted for review and verification.

All welds shall receive 100 percent visual examination. Visual weld examination acceptance criteria and other NDE acceptance criteria shall be in accordance with applicable referenced codes and design documents. Records of these examinations shall be documented.

3.6.4 Records:

Records of inspections, NDE, impact testing, hardness testing, PWHT charts or records, base material test reports, filler material test reports, radiographic film with applicable reader sheets, deviation requests including resolution documentation, nonconformance reports, and other records, as required, shall be retained by the Contractor for 5 years after completion of the work. Records shall be submitted to the Purchaser.

Quality records, including applicable Data Report Forms generated by a manufacturer or assembler in accordance with an approved Quality Control System and applicable Certificates of Authorization from the ASME Boiler & Pressure Vessel Code, shall be provided in accordance with the approved contract or purchase order. Quality records shall be legible, appropriately completed, and sufficiently detailed to permit traceability to the item or activity involved.

3.7 Grouting:

Table 1 – General		
General		
1	Application	Grout placed under baseplates, soleplates, and skids for equipment and structures. Equipment grouting shall be performed in accordance with the materials and procedures specified by the equipment supplier in their installation/instruction manual. When the equipment supplier does not specify the requirements for equipment grouting, equipment grouting shall comply with the requirements of this specification and the grout manufacturer's installation procedures and requirements.
Codes and Standards		
2	Cementitious Grout	ASTM C1107
3	Fluid grout test for cementitious grout	ASTM C939
4	Flowable grout test for cementitious grout	ASTM C1437
5	Compressive strength test method for cementitious grout	ASTM C109 as modified by ASTM C1107
6	Compressive strength test method for epoxy grout	ASTM C579, test method B

Table 2 - Products		
Requirements and Performance		
1	**General Purpose Non-shrink Cementitious Grout**	
2	Minimum Requirements	ASTM C1107
3	Temperature Range	Between 50° F (10° C) and 90° F (32° C).
4	Minimum Compressive strength at 28 days	5000 psi (35 MPa)
5	Working times at a flowable consistency	30 minutes
6	Bleeding	None at manufacturer's maximum recommended water content.
7	Approved Products	Master Builders "MasterFlow 100 or 555" L & M "Duragrout" Dayton Superior 1107 Advantage Unisorb "V-1" Non-shrink Euclid "NS" Grout Five Star Products "Five Star Grout"
8	**Precision Non-shrinking Cementitious Grout**	
9	Minimum Requirements	ASTM C1107
10	Temperature Range	Between 45° F (7° C) and 90° F (32° C).
11	Minimum Compressive strength at 28 days	5000 psi
12	Working time at a flowable consistency	30 minutes
13	Bleeding	None at manufacturer's maximum recommended water content.

14	Approved Products	Master Builders "MasterFlow 928,555, or 4316 Grout" Five Star Products "Five Star Fluid Grout 100" Five Star Products “Five Star Grout” L & M "Crystex" Unisorb "V-1 Non-shrink" Euclid "Hi-Flow" CGM Pro Grout 100

Table 3 - Execution		
General		
1	Surface preparation, mixing, placing, finishing, and curing	In accordance with Grout Manufacturer’s Instructions.
2	Anchor bolt protection	In accordance with Grout Manufacturer’s Instructions.
3	Installation of shims/wedges and leveling devices	In accordance with Grout Manufacturer’s Instructions.
Additional Requirements		
4	Surface preparation of concrete	Remove laitance, expose sound surface mortar, and provide an exposed aggregate surface. Remove oil, grease, curing compound, or other foreign materials. Use of a chemical surface retarder to expose aggregate immediately after placing and finishing concrete is permitted on new installations, unless the grout manufacturer requires a mechanical means of roughening.
5	Installation methods	Sufficient to provide complete, void free filling of all space beneath the baseplate
6	Forms	Enclose the base and contain flowable grout mixtures.
7	Spacing between the form and base	Sufficient to permit manipulation of the grout and not less than 0.75 inches.
8	Form height	Top higher than the bottom of base.
9	Anchor bolt sleeves	Remove closed cell foam and all water prior to grouting operations.
10	Alignment and Level	
11	Pre-placement verification	By Purchaser.
12	Control	Three-point control.
13	Leveling method	Leveling screws or steel shims/wedges.
14	Leveling screw nut	Locate above and below temporary lugs attached to the base.
15	Steel Shims/Wedges	Prevent steel shims/wedges from being dislodged during grout placement.
16	Steel Shim/Wedge Grout Encapsulation	2 inch (50 mm) minimum Steel shims/wedges shall be a minimum of 2 inches (50 mm) from the edge of the baseplate or skid frame.
17	Wood Shims/Wedges	Prohibited.
18	Finishing	
19	Grout Protection	Protect from disturbance until a stiff set is obtained.

20	Edges of grout (grout shoulders)	Remove forms and excess grout. Width of grout shoulders should not exceed 3 inches (75 mm). Avoid large areas of unconfined grout.
21	Grout Edge Bevel	Approximately 45 degrees from bottom of base
22	Exposed Edges and Adjacent Surfaces	Clean to remove all grout. 90° edges should have a 45° chamfer. The chamfer may be cut into the grout before final set (cementitious grout only) or built into the formwork (epoxy grout).
Applications		
23	General Purpose Non-Shrinking Cementitious Grout	Pipe Supports Instrument Stands Stairs Light structural columns Tank Bases (required grout flow less than 2 ft)
24	Precision Non-Shrinking Cementitious Grout	Heavy structural columns Fans Pumps Compressors Tank Bases (required grout flow more than 2 ft)

3.7 Post-Installed Anchorage to Concrete (Structural):

General		
1	Application	Anchorage to hardened concrete using Mechanical (Expansion) or Adhesive Anchors for specific uses as indicated below.
2	Structural anchors shall be suitable for cracked concrete	Yes
3	Seismic Design Category	A
4	Furnish and Install	Anchors, compatible nuts and washers, adhesives
5	Installation Requirements	In accordance with Manufacturer's Printed Installation Instructions (MPII) and ICC-ES Evaluation Reports. Reinforcing shall not be cut during anchor installation without approval by Purchaser.
Codes and Standards		
6	Concrete Design Code	ACI 318-14, Chapter 17
7	Acceptance Criteria basis for ICC Evaluation Reports – Mechanical Anchors	ICC-ES AC193
8	Acceptance Criteria basis for ICC Evaluation Reports– Adhesive Anchors	ICC-ES AC308
Requirements and Performance		
9	**Mechanical (Expansion) Anchors**	
10	Usage	Structural elements. Guardrails. Fire Protection components including pipe hangers Suspended or horizontal pipe or cable tray supports where the tributary load to the support exceeds 400 pounds (180 kg).
11	Type	Wedge Anchor
12	Compliance with ICC Evaluation Report	Required
13	Anchor Selection based on Exposure Conditions	
14	Interior, Dry	Hilti Kwik-Bolt TZ, Carbon steel with electroplated zinc coating (ICC ESR-1917)
15	Interior, Damp or Wet. Exterior.	Hilti Kwik-Bolt TZ, Type 304 Stainless Steel body, nut, and washer, Type 316 Stainless steel sleeve (ICC ESR-1917)
16	Saltwater exposure. High corrosion locations.	Not Applicable
17	Alternate manufacturers. See Note 2.	ITW Red Head, DeWalt, Simpson Strong-Tie
18	**Mechanical (Expansion) Anchors**	
19	Usage	Mechanical and electrical equipment weighing over 400 pounds (180 kg). Bottom supported pipe or cable tray supports where the tributary load to the support exceeds 400 pounds (180 kg).
20	Type	Wedge Anchor
21	Compliance with ICC Evaluation Report	Not required

22	Anchor Selection based on Exposure Conditions	
23	Interior, Dry	Hilti Kwik-Bolt TZ, Carbon steel with electroplated zinc coating
24	Interior, Damp or Wet. Exterior.	Hilti Kwik-Bolt TZ, Type 304 Stainless Steel body, nut, and washer, Type 316 Stainless steel sleeve
25	Saltwater exposure. High corrosion locations.	Not Applicable
26	Alternate manufacturers. See Note 2.	ITW Red Head, DeWalt, Simpson Strong-Tie
27	**Adhesive Anchors**	
28	Usage	Structural elements. Guardrails. Fire Protection components including pipe hangers except adhesive anchors shall not be used in an upwardly inclined installation. Suspended, horizontal, or bottom supported pipe or cable tray supports where the tributary load to the support exceeds 400 pounds (180 kg). Mechanical and electrical equipment weighing over 400 pounds (180 kg).
29	Compliance with ICC Evaluation Report	Required
30	Anchor Selection based on Exposure Conditions	
31	Interior, Dry	ASTM F1554 Threaded Rod, Grade 36 unless otherwise noted on drawings. Hot dipped galvanized.
32	Interior, Damp or Wet. Exterior.	ASTM F1554 Threaded Rod, Grade 36 unless otherwise noted on drawings. Hot dipped galvanized.
33	Saltwater exposure. High corrosion locations.	Not Applicable
34	Adhesive	Hilti HY-200 (ICC ESR-3187)
35	Alternate manufacturers. See Note 2.	ITW Red Head, DeWalt, Simpson Strong-Tie
36	Minimum Age of Concrete Prior to Anchor Installation	21 days
37	Concrete Temperature Range at time of Installation	14 F (-10 C) to 104 F (40 C)
38	In-Service Concrete Temperature Limits	Maximum short-term temperature 176 F (80 C), maximum long term temperature 110 F (43 C)
39	Moisture Condition at time of installation	Dry Concrete
40	Type of Lightweight Concrete	Not Applicable
41	Hole Drilling and Preparation	Hammer drill only. Clean hole with steel brushes and compressed air.
42	Installer Certification Requirements for Horizontal or Upwardly Inclined Anchors	ACI/CRSI Adhesive Anchor Installation Program
Inspection		
43	Building Code Required Special Inspection per IBC Chapter 17.	Not Required
44	Inspection of Mechanical Anchors as specified in Note 3, shall be performed by	Purchaser
45	Inspection of Adhesive Anchors as specified in Note 4, shall be performed by	Purchaser

Notes	
	1. Not Used. 2. Pre-approval by Purchaser required prior to use of product from alternate manufacturer. Alternate product shall provide comparable performance to specified anchor. Vendor data sheets and ICC-ES Evaluation Report required with submittal. Purchaser reserves the right to reject an alternate product or manufacturer, even if listed herein. 3. Mechanical (Expansion) Anchors Inspections. Perform the following inspections during initial installation of each type and size for each installer followed by 5% of remaining anchors: Verify horizontal and vertical location of anchor(s). Verify diameter and depth of drilled hole, compliance with drill bit requirements. Verify hole is clean, dry, and free of debris. Verify installer has cleaned holes using clean, oil-free compressed air, a wire brush and then compressed air again. Verify anchors are free of oil, dirt, loose rust, loose dry mortar, or damage. Verify anchor embedment and tightening torque. Verify installation in accordance with manufacturer's printed installation instructions. 4. Adhesive Anchor Inspections. Perform the following inspections during initial installation of each type and size for each installer followed by 5% of remaining anchors, except for anchors installed horizontally or upwardly inclined which shall be 100% inspected: Verify horizontal and vertical location of anchor(s). Verify diameter and depth of drilled hole, compliance with drill bit requirements. Verify hole is clean, dry, and free of debris. Verify installer has cleaned holes using clean, oil-free compressed air, a wire brush and then compressed air again. Verify anchors are free of oil, dirt, loose rust, loose dry mortar, or damage. Verify application of adhesive to bottom of hole and during withdrawal. Verify insertion of anchor to proper depth with proper length extending out of hole. Verify proper coating of anchor by noting extrusion of adhesive from hole and twisting to coat entire anchor. Verify installation in accordance with manufacturer's printed installation instructions.

3.8 Post-Installed Anchorage to Concrete (Non-Structural):

General		
1	Application	Anchorage of the following to hardened concrete using Mechanical (Expansion) or Adhesive Anchors: Architectural components Suspended, horizontal, or bottom supported pipe or cable tray supports where the tributary load to the support is 400 pounds (180 kg) or less with the exception of fire protection components including pipe hangers. Mechanical and electrical equipment weighing 400 pounds (180 kg) or less.
2	Furnish and Install	Anchors, compatible nuts and washers, adhesives
3	Installation Requirements	In accordance with Manufacturer's Printed Installation Instructions (MPII). Reinforcing shall not be cut during anchor installation without approval by Purchaser.
Requirements and Performance		
4	**Mechanical (Expansion) Anchors**	
5	Type	Sleeve or Drop-in anchor. See Note 1.
6	Anchor Selection based on Exposure Conditions	
7	Interior, Dry Interior, Damp or Wet. Exterior	Hilti HLC Sleeve Anchor, carbon steel with zinc plated coating; Hilti HDI/HDI-L Drop-in Anchor, carbon steel with zinc plated coating ITW Red Head Dynabolt sleeve anchor, carbon steel with zinc plated coating; ITW Red Head Multi-Set II drop-in anchor, carbon steel with zinc plated coating DeWalt Lok-Bolt AS sleeve anchor, carbon steel with zinc plated coating; DeWalt Steel Dropin anchor, carbon steel with zinc plated coating Simpson Strong-Tie Sleeve-All sleeve anchor, carbon steel with zinc plated coating; Simpson Strong-Tie Drop-in Anchor, carbon steel with zinc plated coating
8	Saltwater exposure. High corrosion locations.	Not Applicable
9	Alternate manufacturers	See Note 2.
10	**Adhesive Anchors**	
11	Type	Threaded Rod
12	Anchor Selection based on Exposure Conditions	
13	Interior, Dry	ASTM F1554 Threaded Rod, Grade 36 unless otherwise noted on drawings. Hot dipped galvanized.
14	Interior, Damp or Wet Exterior	ASTM F1554 Threaded Rod, Grade 36 unless otherwise noted on drawings. Hot-dip galvanized.

15	Saltwater exposure. High corrosion locations.	Not Applicable
16	Adhesive	Hilti HY-200
17	Alternate manufacturers. See Note 2.	ITW Red Head, DeWalt, Simpson Strong-Tie
18	Type	Internally Threaded Insert. Use only where specifically noted on drawings.
19	Anchor Selection based on Exposure Conditions	
20	Interior, Dry	Hilti HIS-N Carbon Steel with electroplated zinc coating
21	Interior, Damp or Wet Exterior	Hilti HIS-RN 316 SS Stainless Steel
22	Saltwater exposure. High corrosion locations.	Not Applicable
23	Adhesive	Hilti HY-200
24	Alternate manufacturers	See Note 2
Notes		
	1. Structural mechanical anchors specified in 4.9 may be substituted for non-structural mechanical anchors specified herein. 2. Pre-approval by Purchaser required prior to use of product from alternate manufacturer. Alternate product shall provide comparable performance to specified anchor. Vendor data sheets required with submittal. Purchaser reserves the right to reject an alternate product or manufacturer, even if listed herein.	

3.9 Insulation:

3.9.1 Piping Insulation and Jacketing:

Piping insulation and jacketing shall be furnished for the piping as indicated below:

- Service Water line from TP-701 to overflow tank

Material Types	
Piping insulation materials shall be	1” diameter Mineral fiber with a nominal density of 8 lbs/ cu ft
Material Requirements	
Where mineral fiber blanket is furnished, it shall be provided	Without facings **or** With woven wire mesh facing on one side **or** With woven wire mesh facing on both sides **or** With expanded metal lath facing on one side **or** With expanded metal lath facing on both sides
Jacketing	Embossed aluminum with a minimum thickness of 0.016 inch
Method of securing insulation to equipment shall be	Steel bands **or** Welded studs **or** Impaling pins and speed washers **or** Steel bands, welded studs, or impaling pins and speed washers, as determined for each application
Jacketing for elbows shall be	Preformed aluminum elbows **or** Field fabricated from aluminum sheet **or** Preformed aluminum elbows or field fabricated from aluminum sheet

3.10 Field Applied Protective Coatings:

3.10.1 Piping Scope of Supply:

Scope of supply shall include all painting all carbon steel piping, contractor fabricated pipe supports, and all touch-up painting. Touch-up painting of all B&W supplied parts shall be done in accordance to BW paint specification, 225361-01-Paint.

Table 1 - General		
General		
1	Application	Field coatings
Codes and Standards		
2	Code compliance	Use the jurisdictionally approved code editions and addenda for all codes. Use the most recent edition and addenda in effect at the date of this document if none are jurisdictionally mandated.
3	Fabrication details, surface finish requirements, and proper design considerations for tanks and vessels to be lined for immersion service	NACE SP0178
4	Mineral and Slag Abrasives	SSPC-AB 1
5	Cleanliness of Recycled Ferrous Metallic Abrasives	SSPC-AB 2
6	Newly Manufactured or Remanufactured Steel Abrasives	SSPC-AB 3
7	Solvent cleaning	SSPC-SP 1
8	Hand tool cleaning	SSPC-SP 2
9	Power tool cleaning	SSPC-SP 3
10	White metal blast cleaning	SSPC-SP 5 / NACE No. 1
11	Near white blast cleaning	SSPC-SP 10 / NACE No. 2
12	Commercial blast cleaning	SSPC-SP 6 / NACE No. 3
13	Brush-off blast cleaning	SSPC-SP 7 / NACE No. 4
14	Power tool cleaning to bare metal	SSPC-SP 11
15	Surface Preparation and Cleaning of Steel and Other Hard Materials by High- and Ultra-High Pressure Water Jetting Prior to Recoating	SSPC-SP 12
16	Brush Off Blast Cleaning of Coated and Uncoated Galvanized Steel, Stainless Steels and Non-Ferrous Metals	SSPC-SP 16
17	Shop, field, and maintenance painting of steel	SSPC-PA 1
18	A guide to safety in paint application	SSPC-PA Guide 3
19	Standard procedure for evaluating painting contractors	SSPC-QP 1
20	Visual standard for abrasive blast cleaned steel	SSPC-VIS 1

21	Visual standard for power and hand tool cleaned surfaces	SSPC-VIS 3
22	Dehumidification and Temperature Control	SSPC-TR 3 / NACE 9A192
23	Surface Preparation of Soluble Salt Contaminated Steel Substrates	NACE 6G186
24	Handling and storage	Abide by all EPA, OSHA, and state regulations regarding storage, handling, and use of flammable and combustible liquids

Table 2 - Products		
Materials		
1	Coating Materials	Use new and undamaged materials. Deliver to the job in original, unopened containers, with labels intact.
2	Material handling	Maintain within the temperature range required by the coating manufacturer during transportation, storage, mixing and application. Store appropriately to ensure proper quality when used. Do NOT add any adulterant, unauthorized thinner, or other material not included in the coating formulation to the coating for any purpose.
3	Air quality regulation	Ensure all coatings conform to the air quality regulations applicable at the location of use. Do NOT use coating materials that cannot be guaranteed by the manufacturer to conform to the regulations, whether or not specified by product designation.
4	Multiple coatings	For successive field coats, use coatings produced by the same manufacturer. Cause no wrinkling, lifting, or other damage when applying first field coating over underlying shop coats
5	Tinting	Use factory tinted coatings
Material Safety		
6	Employees who will be using chemicals (solvents, cleaners, lubricants, coatings, linings, etc.)	Knowledgeable and skilled in the proper use of and the hazards associated with these chemicals in accordance with SDSs
Testing Requirements		
7	Indicating moisture in concrete by the plastic sheet method	ASTM D4263
8	Indicating oil or water in compressed air	ASTM D4285
9	Measurement of wet film thickness by notch gauges	ASTM D4414
10	Field measurement of surface profile of blast cleaned steel	ASTM D4417
11	Pull-off strength of coatings using portable adhesion testers	ASTM D4541
12	Measurement of dry paint thickness with magnetic gauges	SSPC-PA 2

13	Discontinuity (Holiday) testing of new protective coatings on conductive substrates	NACE SP0188
14	Guide for Illumination of Industrial Painting Projects	SSPC Guide No. 12
15	Field Methods for Retrieval and Analysis of Soluble Salts	SSPC-TG 15
Quality Assurance		
16	Coating system submittal	Provided manufacturers standard data sheets. Develop and submit a separate submittal for each variation or change in coating system or surface coated.
17	Certification	Review and approve of, in writing, the coating manufacturer's recommendations for intended service. Submit, in writing, any variations from these specifications or the coating manufacturers published recommendations. Any variations must be approved.
18	Color cards	Use owner provided color codes or owner chosen colors
19	Submittal approval	Submittals must be approved prior to the commencement of work

Table 3 - Execution		
General		
1	Manufacturer's recommendations	Meet or exceed the coating manufacturer's minimum recommendations for cleaning, surface preparation, and coating application. Comply with the manufacturer's minimum recommendations even if they exceed the specified requirements.
2	Coating inspector	Assign an experienced coating inspector to supervise the entire process to ensure that all procedures meet or exceed the specifications or the coating manufacturer's recommendations. A third party lining inspector may be provided to ensure compliance with this specification.

3	Items not to be coated Unless otherwise noted	Metal wall panels and flashings (exterior). Glass and glazing. Acoustical ceiling. Aluminum surfaces. Brass and Bronze. Quarry tile, ceramic tile, or ceramic granular flooring. Resilient floor coverings. Hardware. Floor plates. Embedments (galvanized). Grating. Galvanized ductwork, dampers, and fan boxes. Light fixtures, except supports. Electrical conductors, insulated or uninsulated. Electrical conduits, wireways, and junction boxes. Cable trays and supports. Chromium plated metals. Gauges. Rotating shafts and couplings. Rubber belts, skirting, gaskets, and idler disks.
4	Coating plant equipment	Coat all exposed surfaces of the equipment as directed on the Coating System Data Sheets. The remainder of the plant equipment will be coated under separate specifications.
5	Coating applicators	Employ supervisors and workers qualified by commercial experience installing the types of materials specified.
Surface Preparation		
6	Surface preparation specification	These surface preparation requirements are a minimum. Where the requirements published in the coating manufacturer's data sheets exceed the limits specified, use the data sheets as the minimum requirement.
7	Surfaces to be coated	Clean and dry all surfaces before coating. Completely remove Oil and grease using techniques described in SSPC-SP 1 before mechanical cleaning is started. Meet the recommendations of the coating manufacturer for surface preparation. Ensure surfaces are free of cracks, pits, projections, or other imperfections that would interfere with the formation of a smooth, unbroken coating film.

8	Previously coated surfaces For touchup or repair	Dull the gloss on previously coated surfaces if necessary for proper adhesion of topcoats. Clean as recommended by the coating manufacturer. Feather the edges of the repaired area by sanding or wire brushing to produce a smooth transition that will not be noticeable after the coating is applied. Completely remove all coatings made brittle or otherwise damaged by heat of welding. All repairs must be in accordance with the original manufacturer's recommendations for repair
9	Abrasive blasting	Verify the quality of compressed air in accordance with ASTM D4285 prior to abrasive blasting. Carry out the test at the beginning of each shift and witnessed by the coating inspector.
10	**Ferrous Metal Surfaces**	
11	Ferrous metal surface preparation	Prepare for coating by using one or more of the following cleaning procedures: solvents (SSPC-SP1); hand tools (SSPC-SP2); power tools (SSPC-SP3 or -SP11); abrasive blasting (SSPC-SP5, -SP6, -SP7, or -SP10); or water jetting (-SP12). Completely remove oil and grease in accordance with SSPC-SP1 before beginning any other cleaning.
12	Welds on ferrous metal surfaces	Scrape and grind the surfaces of welds as necessary to remove all slag and weld spatter. Unless specified otherwise in the Coating System Data Sheets, grind welds smooth and free of all defects in accordance with NACE Standard SP0178, Appendix C, Designation E on all ferrous metal surfaces.
13	Ferrous metal surface blasting	Remove all blasting residue, waste, and accumulation before coating application
14	Ferrous metal surface coating	Coat or line cleaned surfaces with coating, primer, or touchup within 6 hours of cleaning, or before rust bloom occurs. Do NOT allow blast cleaned surfaces to stand overnight before coating.
Coating Work		
15	**Mixing and Thinning**	
16	Coating storage and use	Keep coating containers tightly closed except while coating is being withdrawn. Mix coatings thoroughly each time any is withdrawn from the container.
17	Factory mixing	Use coatings factory mixed to proper consistency and viscosity for hot weather application with thinning and thinners recommended by the manufacturer for ambient temperatures

18	Thinning	Thin only as necessary to obtain recommended coverage at lower application temperatures. Do NOT reduce the wet film thickness of applied coating, by addition of coating thinner or otherwise, below the thickness recommended by the coating manufacturer. Conduct thinning in compliance with all applicable air quality regulations.
19	Coating pigmentation	Maintain uniform suspension of coating pigments during application. Jobsite tinting is NOT permitted.
20	**Coating Application**	
21	General coating	Apply coating in a neat manner producing an even film of uniform and proper thickness, with finished surfaces free of runs, sags, ridges, laps, and brush marks. Do not apply coating at a rate of coverage greater than the maximum rate recommended by the coating manufacturer. Apply coating materials in accordance with the manufacturer's recommendations by competent and experienced applicators. Protect freshly coated surfaces from dust and other contaminants.
22	Ventilation	Provide ventilation adequate to remove all particulates and solvent vapors. Where natural ventilation is inadequate, employ a mechanical ventilation system. Provide a clean air supply during all phases of coating operations.
23	Failed coatings	Will not be accepted. Remove entirely down to the substrate and recoat the surface. Failures include but are not limited to, checking, cracking, teardrops, fat edges, fisheyes, or delamination.
24	Protection of surfaces	Use proper dropcloths, masking tapes, and other protective measures throughout the work to protect surfaces from accidental spraying, splattering, or spilling of coatings. Correct and repair damage resulting from coating operations. Immediately remove coatings deposited on surfaces not currently being coated.
25	Hardware, components, and fittings	Remove and reinstall, or provide adequate in-place protection for, valve and equipment identification tags, gauges, installed hardware, accessories, lighting and electrical components, factory finished materials, plumbing fixtures and fittings, and other materials that may become splattered or damaged by coating materials

26	**Environmental Conditions**	
27	Weather and debris	Do not apply coatings during wet, damp, or foggy weather, or when windblown dust, dirt, debris, or insects will collect on freshly applied coating except under environmentally controlled conditions
28	Low temperatures	Do NOT apply coatings at temperatures less than the minimum temperature recommended by the coating manufacturer
29	High temperatures	Do NOT apply coatings at temperatures or greater than the maximum temperature recommended by the coating manufacturer. During periods of elevated ambient temperatures, ensure that proper application is performed including adherence to all re-coat window requirements. Keep the surface temperature during application below 100°F by shading the application area from direct sunlight, applying coating in the evening or at night, and ventilating the area to reduce the humidity and temperature.
30	Humidity	Do NOT install coating or lining material if substrate temperature is within 5° F of the dewpoint temperature or if the relative humidity is greater than 85%. Do NOT apply coatings to metal surfaces where conditions are likely to cause condensation, regardless of the air temperature. Do NOT apply coatings when the relative humidity is greater than the maximum or less than the minimum values recommended by the coating manufacturer.
31	Temporary enclosures	Provide where necessary. Maintain the temperature within acceptable temperature limits during surface preparation and coating application activities and until the coating has fully cured. Maintain the relative humidity within acceptable temperature limits during surface preparation and coating application activities and until the coating has fully cured.
Field Quality Control		
32	Required testing and inspection	Visual inspection, surface profile, wet and dry film thickness, spark testing, and adhesion testing
33	Visual inspection	Visually inspect the surface of the protective coatings
34	Film thickness	Verify the coating film thickness by measuring the film thickness of each coat as it is applied and the dry film thickness of the entire system. Measured dry film thickness in accordance with SSPC-PA 2. Measured wet film thickness using a gauge that will measure the wet film thickness with an accuracy of ±0.5 mil in accordance with ASTM D4414.

35	Holiday testing	Where specified on the Coating System Data Sheets (CSDS), holiday test coatings using an acceptable electrical spark tester set at the recommended voltage. Thin films may be tested with the low voltage sponge test procedure. Observe the spark testing and verify the testing equipment is working properly before starting the spark testing of the coating. Use an electrode with continuous movement and that will proceed in a systematic manner to cover 100% of the coated surface in one pass only. Ensure the electrode maintains continuous contact with the coated surface. Conduct holiday testing for coatings on metal in accordance with NACE SP0188. Mark and repair all detected holidays and pinholes Perform repairs in accordance with the coating manufacturer's published recommendations.
36	**Coating Adhesion**	
37	Coating adhesion testing	Where coated surfaces contain visible defects that could adversely affect the adhesive or cohesive properties of the film, conduct an adhesion test to validate the integrity of the coating system. Visible defects in the film that require performance of an adhesion test include; overspray, cratering, runs or sags, solvent blistering, dirt or debris in the film, flaking, lifting or cracking. Allow the coated test area to cure completely according to the coating manufacturer's published recommendations prior to performing the adhesion test. Perform a minimum of one adhesion test in accordance with ASTM D4541 for steel substrates and SSPC-SP 13 for concrete substrates. The resultant coating adhesion strength must meet or exceed the minimum value specified in the coating manufacturer's published literature or, for concrete, exceed the minimum surface tensile strength of the substrate.

38	Coating adhesion failure	If the surface tested fails to comply with the minimum specified adhesion strength, expand adhesion testing to adjacent surfaces until sound coating, meeting or exceeding the minimum adhesion strength value specified in the coating manufacturer's published literature, is obtained. Remove coating materials, down to the substrate, from surfaces that exhibit adhesion values less than the specified minimum and replace. Remove coating by mechanical means, such as hand/power tool and/or abrasive blasting. Reapply the coating in accordance with the applicable coating system data sheet. Treat interfaces and tie-ins between the previously coated surfaces and surfaces that have been replaced in compliance with recommendations stated in the coating manufacturer's published literature.

Datasheets

39	**Description**	**Approved Products** **Manufacturer: First Coat, Second Coat**	**Dry Film Thickness (First Coat/Second Coat)**
40	Hot Dipped Galvanized Steel	Carboline: Carboguard 60, Carbothane 134 HG International: Interseal 670HS, Interthane 990 Jotun: Penguard Universal, Hardtop XP PPG: Amerlock 2, Pitthane Ultra Sherwin Williams: Macropoxy 646, Acrolon 7300 Tnemec: Series 27, Series 1095	1st Coat - 3.0-4.0 2nd Coat – 2.0-3.0
41	Carbon Steel Pipe (no insulation <200 °F)	Carboline: Carboguard 893 SG, Carbothane 133 LH International: Interseal 475HS, Interthane 870 Jotun: Penguard Universal, Hardtop XP PPG: Amerlock 2/400, Sigmadur 550 H Sherwin Williams: Macropoxy 646, Acrolon 7300 Tnemec: Series 61, Series 290	1st Coat - 4.0-6.0 2nd Coat – 3.0-4.0
42	Carbon Steel Pipe (no insulation >200 °F)	Carboline: Carbozinc 11 Series, Thermaline 4000 AL International: Interzinc 22, Intertherm 50 PPG: Dimecote 9, Hi-Temp 1000	1st Coat - 2.0-3.0 2nd Coat – 1.0-2.0
43	Carbon Steel Pipe (under insulation <350 °F)	Carboline: Thermaline 450 EP, Thermaline 450 EP International: Interbond 2340UPC, Interbond 2340UPC Jotun: Jotatemp 250, Jotatemp 250 PPG: Hi-Temp 900, Hi-Temp 900 Sherwin Williams: Cor-Cote HT, Cor-Cote HT	1st Coat - 4.0-6.0 2nd Coat – 4.0-6.0

APPENDIX A – DRAWINGS

FOR

CONTRACT NO. HU 2026-15

BOTTOM ASH HOPPER WATER

RECIRCULATION SYSTEM CONSTRUCTION

WHELAN ENERGY CENTER, UNIT I

CITY OF HASTINGS

HASTINGS, NEBRASKA

4-5026

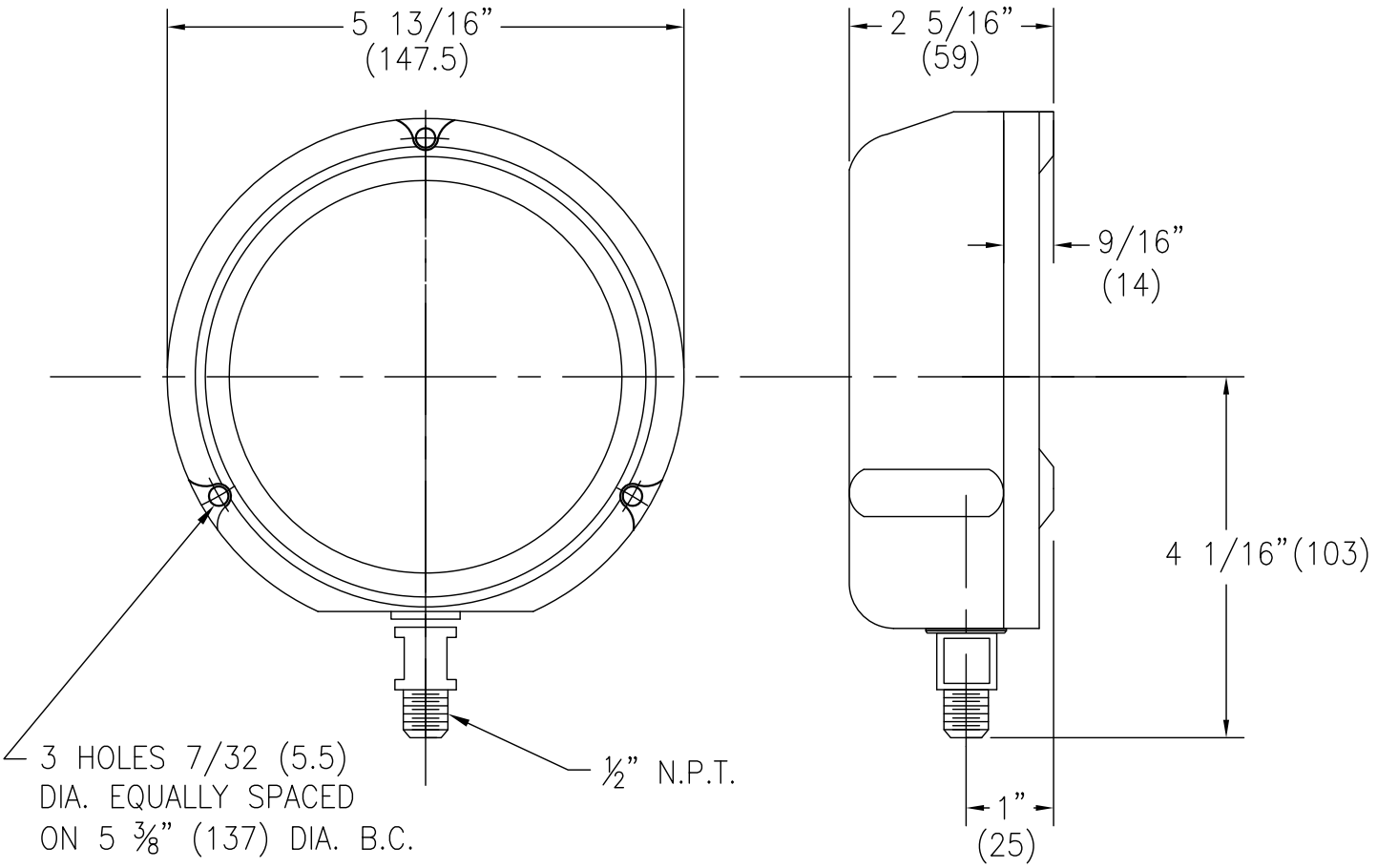

NOTE: SUFFIX "LF" TO THE ITEM NUMBER DENOTES "LIQUID FILLED" I.E. 100278-3LF

ITEM NO.

100278-1	100278-14	103999-1	104910
100278-2	100278-15	103999-2	104911
100278-3	100278-16	103999-3	104912
100278-4	100278-17	103999-4	104913
100278-5		103999-5	104914
100278-6		103999-6	104915
100278-7		103999-7	104916
100278-8		103999-8	104917
100278-9		103999-9	104918
100278-10		103999-10	

TAG NO.: **730C**
ITEM NO.: **100278-7**
SCALE: **0-200 PSI**
INSTRUMENT NO.:
1ASA-PI-1283

REV.	DATE	REV. BY	CKD. BY	ENG. APP.	REVISION RECORD	REV.	DATE	REV. BY	CKD. BY	ENG. APP.	REVISION RECORD
E	5/23/12	DKS	PD	JRM	ADDED LIQUID FILLED OPTION	C	1-93	JEE	PD		ADDED ITEM NO'S
B	8-81	DJH			CHANGED DIM., ADDED ITEM'S	D	10-97	LTN	PD		REV'D FORMAT

DRAWN BY	DATE
KJM	
CHKD BY	DATE
ENGR	DATE

Allen-Sherman-Hoff
A Division of Diamond Power International, Inc.
EXTON, PENNSYLVANIA, U.S.A.

©2010 DIAMOND POWER INTERNATIONAL, INC. ALL RIGHTS RESERVED.
THIS DRAWING IS THE PROPERTY OF DIAMOND POWER INTERNATIONAL, INC. (DPII) AND ITS USE IS GOVERNED BY THE TERMS AND CONDITIONS OF THE CONTRACT FOR WHICH IT WAS CREATED. DPII GRANTS A NON-EXCLUSIVE LICENSE TO USE, REPRODUCE AND DISTRIBUTE THIS DRAWING SOLELY FOR THE MAINTENANCE, REPAIR AND OPERATION, AND FOR SOLICITING BIDS FOR THE ERECTION OF, THE EQUIPMENT DISCLOSED HEREIN.

WALL MOUNTED
PRESSURE/VACUUM GAUGE

SHEET 1 OF 1

SCALE NONE
CONTRACT STD
DWG 4-5026
REV E

DWG NO.: **225361-01-4-5026**

ALLEN-SHERMAN-HOFF
EQUIPMENT LIST
225361-01 - CITY OF HASTINGS - WHELAN ENERGY CENTER - UNIT 1

TAG	QTY	ITEM NO.	MATERIAL DESCRIPTION 1	MATERIAL DESCRIPTION 2	DWG NO.
RECIRCULATION SYSTEM					
701	1	SP236575	SETTLING TANK	XX FT DIAMETER	
702	2	SP236547	SLUDGE PUMP-SETTLING TANK	360 GPM 400' TDH	
702G	2	SP236583	3 INCH RUBBER EXPANSION JOINT	PUMP INLET	
702H	2	SP236584	1-1/2 INCH RUBBER EXPANSION JOINT	PUMP DISCHARGE	
704	1	T-KGVBD06CLDAF	6 INCH C/O KNIFEGATE VALVE	TANK OUTLET	D-8101
705	1	BFV06CESF	6 INCH C/O BUTTERFLY VALVE	W/ SOL, OVERFLOW TANK FLUSH	C-5682
706	2	T-KGVBD04CLDAF	4 INCH C/O KNIFEGATE VALVE	W/ SOL & (2) LS, PUMP SUCTION	D-8101
707	2	104510	1 IN H/O BALL VALVE	STRAINER DRAIN VALVE	A-5164
708	2	T-KGVBD04CLDAF	4 INCH C/O KNIFEGATE VALVE	W/ SOL & (2) LS, SLUDGE PUMP DISCHARGE	D-8101
711	1	LATER	TEMPERATURE TRANSMITTER	OVERFLOW TANK	
711A	1	LATER	THERMOWELL	FOR TAG 711	
712	1	BFV03CESF	3 INCH C/O BUTTERFLY VALVE		C-5682
713	1	SP236585	1 INCH C/O BALL VALVE	W/ SOL, TANK FLUSH	
715	1	227687	LEVEL TRANSMITTER		
730C	1	100278-7	PRESSURE GAUGE	0-200 PSIG	4-5026
730D	1	104508	1/2 IN H/O BALL VALVE		A-5164
733	2	104508	1/2 IN H/O BALL VALVE	STRAINER DP TRANSMITTER	A-5164
735	2	SP236589	4 INCH CHECK VALVE		B-5054
738A	1	16806-0308	ORIFICE PLATE	1.00 ORIFICE	B-6026
738B	1	16806-0308	ORIFICE PLATE	1.00 ORIFICE	B-6026
745A	1	104555	2 INCH H/O BALL VALVE	INSTRUMENT ISOLATION	A-5164
749	4	T-KGVBD04H	4 INCH H/O KNIFEGATE VALVE	STRAINER ISOLATION	D-8085
750	1	SP232629	DIFF PRESSURE TRANSMITTER	STRAINER	
751	2	SP236550	BASKET STRAINER	BA PYRITES PUMPS	
752	1	SP236586	CAMLOCK COUPLER	WITH DUST CAP	
760	1	SP236590	LOT - C.S. PIPE & FITTINGS		
761	1	LATER	LOT - HARDWARE		
762	1	LATER	LOT - GASKETS		
790	1	SP236578	LOT - PIPE SUPPORTS		
799	1	LATER	LOT - EQUIPMENT TAGS		

INSTRUMENT LIST

CITY OF HASTINGS - WHELAN ENERGY CENTER
A-S-H CONTRACT NO. 225361-01
UNIT 1 BOTTOM ASH RECIRCULATION SYSTEM

PLANT TAG NUMBER	A-S-H TAG NO	DESCRIPTION	MANUFACTURER NAME	MODEL NUMBER	RANGE	SETPOINT	UNIT	REF. P&ID	REF. DATASHEET	NOTES
1ASA-ZSO-1295	(704)	LIMIT SWITCH OPEN / VALVE 1ASA-ABV-1170	TOPWORX (EMERSON)	GO SWITCH 81-20528-A2	N/A	N/A	N/A	225361-01-E703-02	N/A	
1ASA-ZSC-1294	(704)	LIMIT SWITCH CLOSED / VALVE 1ASA-ABV-1170	TOPWORX (EMERSON)	GO SWITCH 81-20528-A2	N/A	N/A	N/A	225361-01-E703-02	N/A	
1WSA-ZSO-1319	(705)	LIMIT SWITCH OPEN / VALVE 1WSA-ABV-1550	CONTROLINK	CAB01200E OR EQUIV.	N/A	N/A	N/A	225361-01-E703-02	N/A	
1WSA-ZSC-1320	(705)	LIMIT SWITCH CLOSED / VALVE 1WSA-ABV-1550	CONTROLINK	CAB01200E OR EQUIV.	N/A	N/A	N/A	225361-01-E703-02	N/A	
1ASA-ZSO-1271	(706)	LIMIT SWITCH OPEN / VALVE 1ASA-BV-1180	TOPWORX (EMERSON)	GO SWITCH 81-20528-A2	N/A	N/A	N/A	225361-01-E703-02	N/A	
1ASA-ZSC-1272	(706)	LIMIT SWITCH CLOSED / VALVE 1ASA-BV-1180	TOPWORX (EMERSON)	GO SWITCH 81-20528-A2	N/A	N/A	N/A	225361-01-E703-02	N/A	
1ASA-ZSO-1273	(706)	LIMIT SWITCH OPEN / VALVE 1ASA-BV-1183	TOPWORX (EMERSON)	GO SWITCH 81-20528-A2	N/A	N/A	N/A	225361-01-E703-02	N/A	
1ASA-ZSC-1274	(706)	LIMIT SWITCH CLOSED / VALVE 1ASA-BV-1183	TOPWORX (EMERSON)	GO SWITCH 81-20528-A2	N/A	N/A	N/A	225361-01-E703-02	N/A	
1ASA-ZSO-1275	(708)	LIMIT SWITCH OPEN / VALVE 1ASA-BV-1182	TOPWORX (EMERSON)	GO SWITCH 81-20528-A2	N/A	N/A	N/A	225361-01-E703-02	N/A	
1ASA-ZSC-1276	(708)	LIMIT SWITCH CLOSED / VALVE 1ASA-BV-1182	TOPWORX (EMERSON)	GO SWITCH 81-20528-A2	N/A	N/A	N/A	225361-01-E703-02	N/A	
1ASA-ZSO-1277	(708)	LIMIT SWITCH OPEN / VALVE 1ASA-BV-1185	TOPWORX (EMERSON)	GO SWITCH 81-20528-A2	N/A	N/A	N/A	225361-01-E703-02	N/A	
1ASA-ZSC-1278	(708)	LIMIT SWITCH CLOSED / VALVE 1ASA-BV-1185	TOPWORX (EMERSON)	GO SWITCH 81-20528-A2	N/A	N/A	N/A	225361-01-E703-02	N/A	
1ASA-TIT-1268	711	TEMPERATURE TRANSMITTER / ASH HOPPER OVERFLOW TANK	LATER	LATER	LATER	LATER	DEG F	225361-01-E703-02	LATER	4 - 20 mA
1ASA-ZSO-1281	(712)	LIMIT SWITCH OPEN / VALVE 1ASA-ABV-1178	CONTROLINK	CAB01200E OR EQUIV.	N/A	N/A	N/A	225361-01-E703-02	N/A	
1ASA-ZSC-1282	(712)	LIMIT SWITCH CLOSED / VALVE 1ASA-ABV-1178	CONTROLINK	CAB01200E OR EQUIV.	N/A	N/A	N/A	225361-01-E703-02	N/A	
1ASA-ZSO-1279	(713)	LIMIT SWITCH OPEN / VALVE 1ASA-ABV-1179	LATER	LATER	N/A	N/A	N/A	225361-01-E703-02	N/A	
1ASA-ZSC-1280	(713)	LIMIT SWITCH CLOSED / VALVE 1ASA-ABV-1179	LATER	LATER	N/A	N/A	N/A	225361-01-E703-02	N/A	
1ASA-LIT-1269	715	WATER LEVEL TRANSMITTER / ASH HOPPER OVERFLOW TANK	ROSEMOUNT	2051T	0 - 20	N/A	PSIG	225361-01-E703-02	LATER	4 - 20 mA
1ASA-PI-1283	730C	PRESSURE GAUGE / B.A. PYRITES PUMP DISCHARGE	ASHCROFT	451279AS04L-200#	0 - 200	N/A	PSIG	225361-01-E703-02	225361-01-E703-02	
1ASA-PDIT-1270	750	DIFFERENTIAL PRESSURE TRANSMITTER / B.A. PYRITES PUMP STRAINER	LATER	LATER	LATER	LATER	LATER	225361-01-E703-02	LATER	4 - 20 mA

Notes:
1. A status of "F" indicates the item is FINAL.
2. Those items shown in **bold** text are changes from the previous issue of this list.

ELECTRICAL LOAD LIST

CITY OF HASTINGS - WHELAN ENERGY CENTER
A-S-H CONTRACT NO. 225361-01
UNIT 1 BOTTOM ASH RECIRCULATION SYSTEM

EQUIPMENT NUMBER	TAG NO.	QTY	EQUIPMENT DESCRIPTION	VOLT/ HZ/PH	HP	KW	MAX NO. OPER. SIMULT.	CONNECT LOAD (KW)	STARTER INTEGRAL W/ EQUIP?	STARTER TYPE	REF. P&ID	STATUS	NOTES
-	702	2	BOTTOM ASH/PYRITES PUMP MOTOR	460/60/3	60.0	44.74	1	44.74	NO	FVNR	225361-01-E703-02	F	
								44.7					

Notes:
1. A status of "F" indicates the item is FINAL.
2. Those items shown in **bold** text are changes from the previous issue of this list.

TERMINAL POINT LIST

CITY OF HASTINGS - WHELAN ENERGY CENTER
A-S-H CONTRACT NO. 225361-01
UNIT 1 BOTTOM ASH RECIRCULATION SYSTEM

TIE POINT NO.	DESCRIPTION	SIZE (IN)	CONNECTION TYPE	FLUID	PIPE SCHEDULE	DESIGN			OPERATING			REF. P&ID
						PRESS (PSIG)	FLOW (GPM)	TEMP (°F)	PRESS (PSIG)	FLOW (GPM)	TEMP (°F)	
701	WSA SERVICE WATER MAKEUP TO UNIT 1 B.A. HOPPER OVERFLOW TANK	10"	BUTTWELD	WATER	SCH. 40	150	300	90	100	300	70	225361-01-E703-02
702	UNIT 1 B.A. HOPPER OVERFLOW TO UNIT 1 B.A. HOPPER OVERFLOW TANK	8"	BUTTWELD	WATER	SCH. 40	15	300	175	10	300	140	225361-01-E703-02
703	UNIT 1 B.A. PYRITES PUMP DISCHARGE TO ASA SUPPLY WATER HEADER	10"	BUTTWELD	WATER	SCH. 40	180	320	140	150	320	100	225361-01-E703-02
704	UNIT 1 B.A. HOPPER OVERFLOW TANK TO UNIT 1 B.A. HOPPER OVERFLOW HEADER	8"	BUTTWELD	WATER	SCH. 40	15	300	175	10	300	140	225361-01-E703-02
705	UNIT 1 B.A. HOPPER OVERFLOW TANK BLOWDOWN TO TEMPORARY HOSE	6"	CAMLOCK PLUG END	WATER WITH ASH FINES	SCH. 40	15	700	175	10	700	140	225361-01-E703-02

Notes:

1. Those items shown in **bold** text are changes from the previous issue of this list.

VALVE LIST

CITY OF HASTINGS - WHELAN ENERGY CENTER
A-S-H CONTRACT NO. 225361-01
UNIT 1 BOTTOM ASH RECIRCULATION SYSTEM

PLANT TAG NUMBER	A-S-H TAG NO	DESCRIPTION	REFERENCE P&ID DWG	VALVE TYPE	VALVE SIZE	END CONN.	ACTUATOR	MANUFACTURER NAME	MODEL NO.	VENDOR DRAWING	BODY MATERIAL	FLUID
1ASA-ABV-1170	704	ASH HOPPER OVERFLOW TANK BLOWDOWN ISOLATION VALVE	225361-01-E703-02	KNIFE GATE	6"	CL150 RF FLG	PNEUMATIC D/A CYLINDER	A-S-H	T-KGVBD06CLDAF	225361-01-D-8101	304 SS	WATER
1WSA-ABV-1550	705	WSA SERVICE WATER MAKEUP ISOLATION VALVE	225361-01-E703-02	BUTTERFLY	6"	CL150 FF FLG	PNEUMATIC ROTARY	A-S-H	BFV06CESF	225361-01-C-5682	304 SS	WATER
1ASA-BV-1180	706	BOTTOM ASH/PYRITES PUMP SUCTION ISOLATION VALVE	225361-01-E703-02	KNIFE GATE	4"	CL150 RF FLG	PNEUMATIC D/A CYLINDER	A-S-H	T-KGVBD04CLDAF	225361-01-D-8101	304 SS	WATER
1ASA-BV-1183	706	BOTTOM ASH/PYRITES PUMP SUCTION ISOLATION VALVE	225361-01-E703-02	KNIFE GATE	4"	CL150 RF FLG	PNEUMATIC D/A CYLINDER	A-S-H	T-KGVBD04CLDAF	225361-01-D-8101	304 SS	WATER
1ASA-BV-_____	707	BOTTOM ASH/PYRITES PUMP STRAINER DRAIN VALVE	225361-01-E703-02	BALL	1"	FNPT	LEVER	APOLLO OR EQUAL	70-103-01 OR EQUAL	225361-01-A-5164	B584-C84400 BRONZE	WATER
1ASA-BV-_____	707	BOTTOM ASH/PYRITES PUMP STRAINER DRAIN VALVE	225361-01-E703-02	BALL	1"	FNPT	LEVER	APOLLO OR EQUAL	70-103-01 OR EQUAL	225361-01-A-5164	B584-C84400 BRONZE	WATER
1ASA-BV-1182	708	BOTTOM ASH/PYRITES PUMP DISCHARGE ISOLATION VALVE	225361-01-E703-02	KNIFE GATE	4"	CL150 RF FLG	PNEUMATIC D/A CYLINDER	A-S-H	T-KGVBD04CLDAF	225361-01-D-8101	304 SS	WATER
1ASA-BV-1185	708	BOTTOM ASH/PYRITES PUMP DISCHARGE ISOLATION VALVE	225361-01-E703-02	KNIFE GATE	4"	CL150 RF FLG	PNEUMATIC D/A CYLINDER	A-S-H	T-KGVBD04CLDAF	225361-01-D-8101	304 SS	WATER
1ASA-ABV-1178	712	ASH HOPPER OVERFLOW TANK MIN FLOW RECIRCULATION ISOLATION VALVE	225361-01-E703-02	BUTTERFLY	3"	CL150 FF FLG	PNEUMATIC ROTARY	A-S-H	BFV03CESF	225361-01-C-5682	304 SS	WATER
1ASA-ABV-1179	713	ASH HOPPER OVERFLOW TANK FLUSHING ISOLATION VALVE	225361-01-E703-02	BALL	1"	CL150 FF FLG	PNEUMATIC ROTARY	LATER	LATER	LATER	LATER	WATER
1ASA-UV-1181	734	BOTTOM ASH/PYRITES PUMP DISCHARGE CHECK VALVE	225361-01-E703-02	CHECK	4"	CL150 RF FLG	N/A	A-S-H	A-16062-3	225361-01-B-5054	CL.B CAST IRON	WATER
1ASA-UV-1184	734	BOTTOM ASH/PYRITES PUMP DISCHARGE CHECK VALVE	225361-01-E703-02	CHECK	4"	CL150 RF FLG	N/A	A-S-H	A-16062-3	225361-01-B-5054	CAST IRON	WATER
1ASA-BV-1171	749	BOTTOM ASH/PYRITES PUMP STRAINER ISOLATION VALVE	225361-01-E703-02	KNIFE GATE	4"	CL150 RF FLG	HANDWHEEL	A-S-H	T-KGVBD04H	225361-01-D-8085	304 SS	WATER
1ASA-BV-1172	749	BOTTOM ASH/PYRITES PUMP STRAINER ISOLATION VALVE	225361-01-E703-02	KNIFE GATE	4"	CL150 RF FLG	HANDWHEEL	A-S-H	T-KGVBD04H	225361-01-D-8085	304 SS	WATER
1ASA-BV-1173	749	BOTTOM ASH/PYRITES PUMP STRAINER ISOLATION VALVE	225361-01-E703-02	KNIFE GATE	4"	CL150 RF FLG	HANDWHEEL	A-S-H	T-KGVBD04H	225361-01-D-8085	304 SS	WATER
1ASA-BV-1174	749	BOTTOM ASH/PYRITES PUMP STRAINER ISOLATION VALVE	225361-01-E703-02	KNIFE GATE	4"	CL150 RF FLG	HANDWHEEL	A-S-H	T-KGVBD04H	225361-01-D-8085	304 SS	WATER
1ASA-BV-1175	_____	BOTTOM ASH/PYRITES PUMP STRAINER DP TRANSMITTER ROOT VALVE	225361-01-E703-02	BALL	1/2"	FNPT	LEVER	APOLLO OR EQUAL	70-103-01 OR EQUAL	225361-01-A-5164	B584-C84400 BRONZE	WATER
1ASA-BV-1176	_____	BOTTOM ASH/PYRITES PUMP STRAINER DP TRANSMITTER ROOT VALVE	225361-01-E703-02	BALL	1/2"	FNPT	LEVER	APOLLO OR EQUAL	70-103-01 OR EQUAL	225361-01-A-5164	B584-C84400 BRONZE	WATER
1ASA-BV-1186	730D	BOTTOM ASH/PYRITES PUMP DISCHARGE PRESSURE GAUGE ROOT VALVE	225361-01-E703-02	BALL	1/2"	FNPT	LEVER	APOLLO OR EQUAL	70-103-01 OR EQUAL	225361-01-A-5164	B584-C84400 BRONZE	WATER
1ASA-BV-1177	745A	ASH HOPPER OVERFLOW TANK TEMPERATURE TRANSMITTER ROOT VALVE	225361-01-E703-02	BALL	2"	FNPT	LEVER	APOLLO OR EQUAL	70-103-01 OR EQUAL	225361-01-A-5164	B584-C84400 BRONZE	WATER

Notes:
1. Those items shown in **bold** text are changes from the previous issue of this list.

A-5164

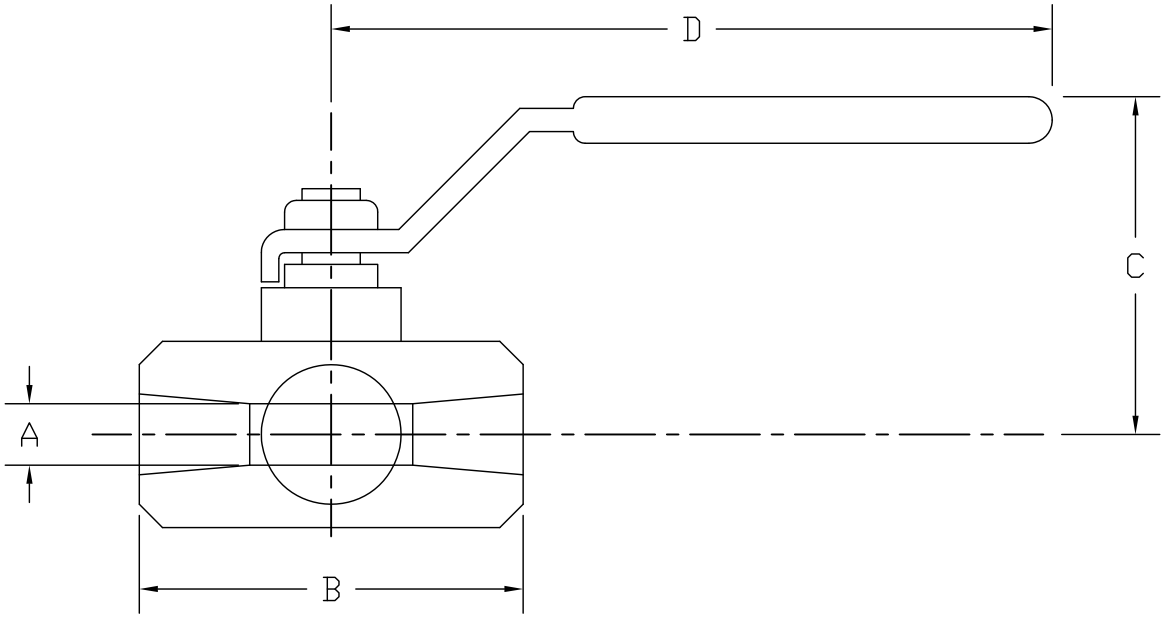

C

ITEM NO.	ITEM NO.	DIMENSIONS (inches)				
316 SS	BRASS	SIZE	A	B	C	D
104506SS	104506	1/4"	.37	2.06	1.75	3.87
104507SS	104507	3/8"	.37	2.06	1.75	3.87
TAG NO.: **745A**	104508	1/2"	.50	2.25	1.75	3.87
104509SS	104509	3/4"	.68	3.00	2.12	4.87
TAG NO.: **707**	104510	1"	.87	3.37	2.25	4.87
104553SS	104553	1-1/4"	1.00	4.00	2.62	5.50
104554SS	104554	1-1/2"	1.25	4.37	3.05	8.00
104555SS	104555	2"	1.50	4.68	3.24	8.00
212406SS	212406	2-1/2"	2.50	6.50	4.00	8.00
212389SS	212389	3"	2.50	6.75	4.00	8.00

NOTE:
TYPICAL DIMENSIONS SHOWN – MAY VARY DEPENDENT UPON ACTUAL SOURCE UTILIZED.

REV.	DATE	REV. BY	CKD. BY	ENG. APP.	REVISION RECORD	REV.	DATE	REV. BY	CKD. BY	ENG. APP.	REVISION RECORD
A	12/96	SFM			REVISED DIMENSIONS	C	3-14-12	JWW	WHH	JWW	ADD 316 SS ITEM NUMBERS (ACR A-2102)
B	3/97	MJP			ADDED NOTE						

DRAWN BY	DATE
SFM	12/17/96
CHKD BY	DATE
ENGR	DATE

Allen-Sherman-Hoff
A Division of Diamond Power International, Inc.
EXTON, PENNSYLVANIA, U.S.A.

©2010 DIAMOND POWER INTERNATIONAL, INC. ALL RIGHTS RESERVED.
THIS DRAWING IS THE PROPERTY OF DIAMOND POWER INTERNATIONAL, INC. (DPII) AND ITS USE IS GOVERNED BY THE TERMS AND CONDITIONS OF THE CONTRACT FOR WHICH IT WAS CREATED. DPII GRANTS A NON-EXCLUSIVE LICENSE TO USE, REPRODUCE AND DISTRIBUTE THIS DRAWING SOLELY FOR THE MAINTENANCE, REPAIR AND OPERATION, AND FOR SOLICITING BIDS FOR THE ERECTION OF, THE EQUIPMENT DISCLOSED HEREIN.

BALL VALVES

SHEET 1 OF 1

SCALE NONE
CONTRACT STD
DWG A-5164
REV C

DWG NO.: **225361-01-A-5164**

B-5054

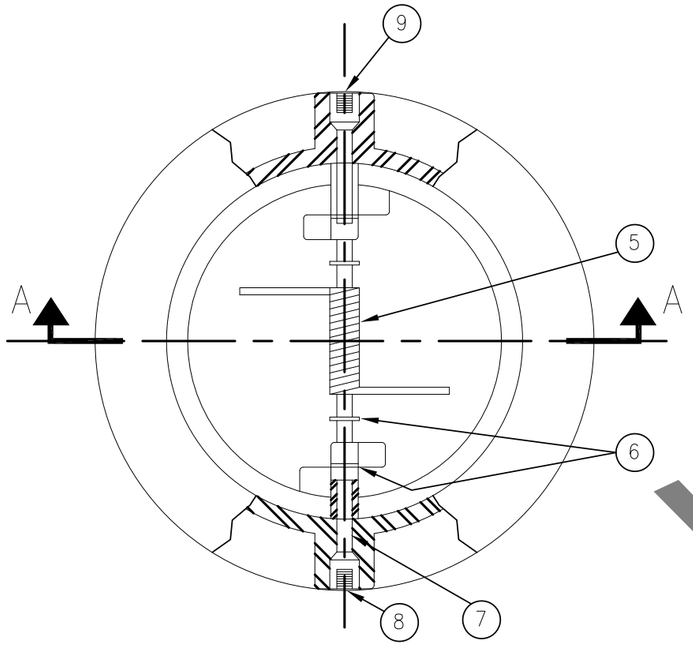

THIS VIEW IS ROTATED 90° TO SHOW THE ACTUAL OPERATING POSITION OF THE VALVE. THE PIN MUST BE VERTICAL FOR HORIZONTAL FLOW

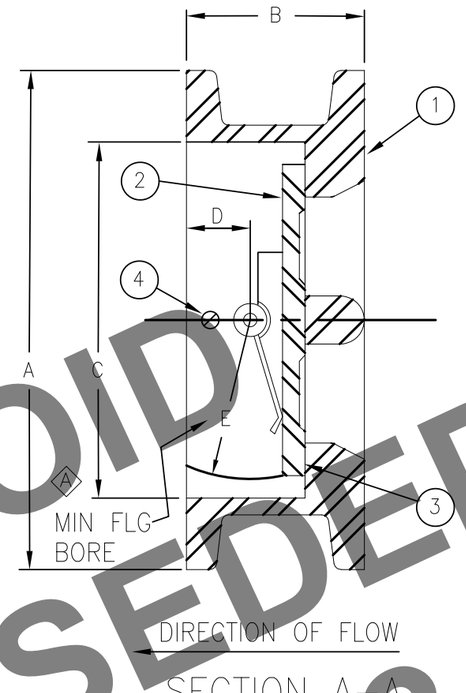

SECTION A-A

ITEM NO.	QTY	PART NAME	MATERIAL
1	1	BODY	CAST IRON
2	2	PLATE	ALUMINUM BRONZE
3	*	SEAL	VITON
4	1	STOP PIN	316 SS
5	1	SPRING	INCONEL 600
6	6	LUG BEARING	316 SS
7	1	HINGE PIN	316 SS
8	2	HINGE PIN RET	316 SS
9	2	STOP PIN RET	316 SS

* INTEGRAL PART OF BODY

NOTE:
1. VALVE FITS BETWEEN TWO ANSI 150# FLANGES.
2. VALVE RATING: 140 PSIG @ 400° F.

TAG NO.: **734**
VALVE NO.'S:
1ASA-UV-1181
1ASA-UV-1184

ASSY NO.	SIZE	O.D. A	DIMENSION B	I.D. C	DIMENSION D	MINIMUM FLANGE BORE RADIUS E	WEIGHT IN LBS.	WEIGHT IN KG	BOLTING NO.	BOLTING DIAMETER	BOLTING LENGTH
A-16062	2" (50)	4 1/8" (105)	2 1/8" (54)	2 3/8" (60)	1" (25)	1 3/32" (28)	5	(2.27)	4	5/8"	5 1/4"
A-16062-1	2 1/2" (65)	4 7/8" (124)	2 1/8" (54)	2 7/8" (73)	1" (25)	1 3/8" (35)	8	(3.63)	4	5/8"	5 1/4"
A-16062-2	3" (80)	5 3/8" (137)	2 1/4" (57)	3 1/2" (89)	1" (25)	1 5/8" (41)	9	(4.08)	4	5/8"	5 1/2"
A-16062-3	4" (100)	6 7/8" (175)	2 1/2" (64)	4 1/2" (114)	1 1/8" (29)	2 3/32" (53)	12	(5.44)	8	5/8"	6 1/4"
A-16062-4	5" (125)	7 3/4" (197)	2 3/4" (70)	5 9/16" (141)	1 3/16" (30)	2 1/2" (64)	18	(8.16)	8	3/4"	6 3/4"
A-16062-5	6" (150)	8 3/4" (222)	3" (76)	6 5/8" (168)	1 1/8" (29)	3 1/16" (78)	22	(9.98)	8	3/4"	7"
A-16062-6	8" (200)	11" (279)	3 3/4" (95)	8 5/8" (219)	1 9/16" (37)	4" (102)	42	(19.05)	8	3/4"	8"
A-16062-7	10" (250)	13 3/8" (340)	4 1/4" (108)	10 3/4" (273)	1 9/16" (37)	4 15/16" (125)	68	(30.84)	12	7/8"	9"
A-16062-8	12" (300)	16 1/8" (410)	5 5/8" (143)	12 3/4" (324)	2 7/32" (56)	5 29/32" (150)	123	(55.79)	12	7/8"	10 1/2"

B DIMENSIONS SHOWN (XXX) ARE IN MILLI-METERS

REV.	DATE	REV. BY	CKD. BY	ENG. APP.	REVISION RECORD
B	10/05	PMD	LJK	LJK	REDRAWN ADDED METRIC
A	4/3/92	OR	PD	DSP	REVD NOTATION "MIN FLG BORE"

DRAWN BY	PRP	1/22/80
CHECKED BY	RCB	1/80
MECH. APP.	DSP	1/80
STRUCT. APP.		
ELECT. APP.		

Allen-Sherman-Hoff
A Division of Diamond Power International, Inc.
EXTON, PENNSYLVANIA, U.S.A.

© 2010 DIAMOND POWER INTERNATIONAL, INC. ALL RIGHTS RESERVED.
THIS DRAWING IS THE PROPERTY OF DIAMOND POWER INTERNATIONAL, INC. (DPII) AND ITS USE IS GOVERNED BY THE TERMS AND CONDITIONS OF THE CONTRACT FOR WHICH IT WAS CREATED. DPII GRANTS A NON-EXCLUSIVE LICENSE TO USE, REPRODUCE AND DISTRIBUTE THIS DRAWING SOLELY FOR THE MAINTENANCE, REPAIR AND OPERATION, AND FOR SOLICITING BIDS FOR THE ERECTION OF, THE EQUIPMENT DISCLOSED HEREIN.

OUTLINE OF CHECK VALVES
SIZES 2" THRU 12"

SHEET 1 OF 1

SCALE NONE
CONTRACT STD
DWG B-5054
REV B

DWG NO.: **225361-01-B-5054 REV.B**

VOID
SUPERSEDED BY
225361-01-734-V101

B-6026

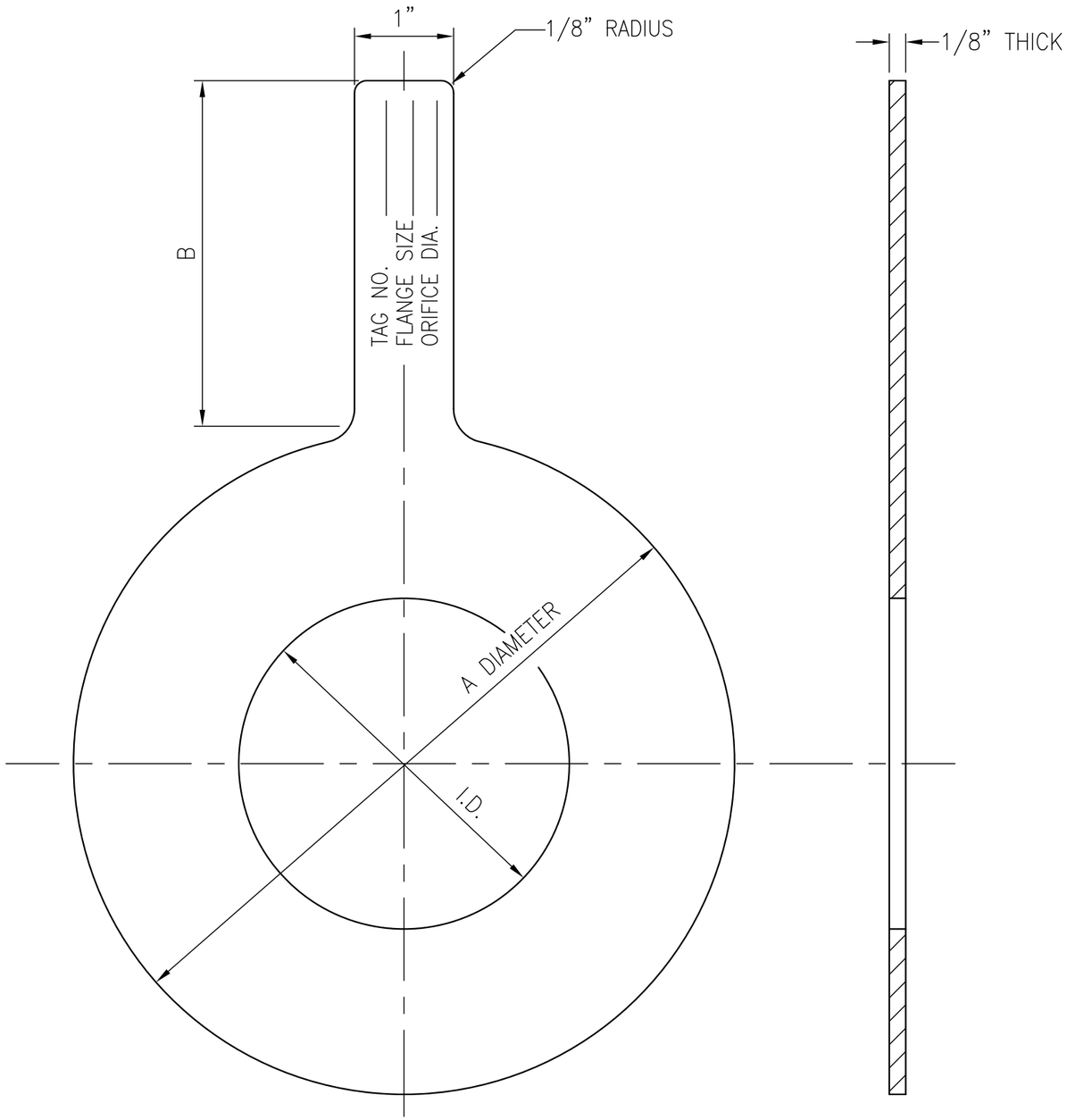

NOMINAL PIPE DIAMETER		A DIAMETER		B TAB LENGTH	
INCHES	MILLIMETERS	INCHES	MILLIMETERS	INCHES	MILLIMETERS
2	50	4.00	102	4.00	100
3	75	5.25	133	4.00	100
4	100	6.75	171	4.00	100
5	125	7.625	194	4.00	100
6	150	8.625	219	5.00	125
8	200	10.875	276	5.00	125
10	250	13.25	337	5.00	125
12	300	16.00	406	5.00	125
14	350	17.625	448	5.00	125
16	400	20.125	511	5.00	125
18	450	21.50	546	5.00	125
20	500	23.75	603	5.00	125
24	600	28.125	714	5.00	125

ITEM NUMBER: 16806-P
EXAMPLE: 16806-XXXX

I.D. IN 1/8" INCREMENTS
NOMINAL PIPE DIAMETER (INCHES)

16806-0406

ORIFICE PLATE FOR 4" DIAMETER PIPE WITH 3/4" (6 x 1/8") DIAMETER ORIFICE

TAG NO.'S: **738A, 738B**
ORIFICE DIA.: **1.000"**

NOTES

1. CHARACTER SIZE FOR LETTERS & NUMBERS TO BE 1/8" MINIMUM, STAMPED ON TAB.
2. STANDARD MATERIAL SHALL BE 304 STAINLESS STEEL
3. OPTIONAL MATERIAL IS 316L STAINLESS STEEL. ADD "A" SUFFIX TO ITEM NUMBER (EXAMPLE: 16806-0406A)
4. ALL BURRS TO BE REMOVED
5. ORIFICE DIMENSIONS ARE BASED ON ANSI 150 LB FLANGES.

REV.	DATE	REV. BY	CKD. BY	ENG. APP.	REVISION RECORD

DRAWN BY	PMD	3/99
CHECKED BY	LJK	3/99
MECH. APP.	LJK	3/99
STRUCT. APP.		
ELECT. APP.		

Allen-Sherman-Hoff
A Division of Diamond Power International, Inc.
EXTON, PENNSYLVANIA, U.S.A.

©2010 DIAMOND POWER INTERNATIONAL, INC. ALL RIGHTS RESERVED.
THIS DRAWING IS THE PROPERTY OF DIAMOND POWER INTERNATIONAL, INC. (DPII) AND ITS USE IS GOVERNED BY THE TERMS AND CONDITIONS OF THE CONTRACT FOR WHICH IT WAS CREATED. DPII GRANTS A NON-EXCLUSIVE LICENSE TO USE, REPRODUCE AND DISTRIBUTE THIS DRAWING SOLELY FOR THE MAINTENANCE, REPAIR AND OPERATION, AND FOR SOLICITING BIDS FOR THE ERECTION OF, THE EQUIPMENT DISCLOSED HEREIN.

STANDARD
ORIFICE PLATES
1/8" THICK STAINLESS STEEL

SHEET 1 OF 1

SCALE NONE
CONTRACT STD
DWG B-6026
REV

DWG NO.: **225361-01-B-6026**

C-5682

DIMENSIONS

VALVE SIZE INCHES	VALVE SIZE DN	ACTUATOR	A	B (A)	C	D	E	F	G	H	J	K	L	M	N–DIA	P – B.C.	Q	R	WEIGHT
2	50	055	3.58 (91)	1.62 (41)	1.32 (34)	2.99 (76)	5.51 (140)	2.97 (75)	5.32 (135)	3.31 (84)	3.31 (84)	2.94 (75)	1.44 (37)	45°	.750 (19)	4.75 (121)	1/2 NPT (15)	1/4 NPT (8)	12 (5)
3	80	065	4.72 (120)	1.75 (44)	2.70 (69)	4.17 (106)	6.30 (160)	3.46 (88)	5.32 (135)	4.19 (106)	4.19 (106)	3.17 (81)	1.67 (42)	45°	.750 (19)	6.00 (152)	1/2 NPT (15)	1/4 NPT (8)	15 (7)
4	100	075	5.91 (150)	2.00 (51)	3.61 (92)	5.20 (132)	7.09 (180)	3.86 (98)	5.32 (135)	4.63 (118)	4.63 (118)	3.34 (85)	1.84 (47)	22.5°	.750 (19)	7.50 (191)	1/2 NPT (15)	1/4 NPT (8)	20 (9)
6	150	100	8.07 (205)	2.12 (54)	5.50 (140)	7.36 (187)	8.07 (205)	4.95 (126)	5.32 (135)	5.79 (147)	5.79 (147)	3.90 (99)	2.40 (61)	22.5°	.875 (22)	9.50 (241)	1/2 NPT (15)	1/4 NPT (8)	32 (15)
8	200	115	10.20 (259)	2.50 (64)	7.39 (187)	9.45 (240)	9.49 (241)	5.53 (141)	5.71 (145)	6.90 (175)	6.90 (175)	4.25 (108)	2.75 (70)	22.5°	.875 (22)	11.75 (298)	1/2 NPT (15)	1/4 NPT (8)	52 (24)
10	250	125	12.21 (310)	2.50 (64)	9.31 (236)	11.50 (292)	10.75 (273)	6.00 (152)	5.71 (145)	7.98 (203)	7.98 (203)	4.44 (113)	2.94 (75)	15°	1.00 (25)	14.25 (362)	1/2 NPT (15)	1/4 NPT (8)	74 (34)
12	300	150	14.33 (364)	3.00 (76)	11.12 (282)	13.58 (345)	12.24 (311)	7.34 (187)	5.71 (145)	9.40 (239)	9.40 (239)	5.09 (129)	3.59 (91)	15°	1.00 (25)	17.00 (432)	1/2 NPT (15)	1/4 NPT (8)	109 (49)

DIMENSIONS IN INCHES (MILLIMETERS) WEIGHTS IN LB (KG)

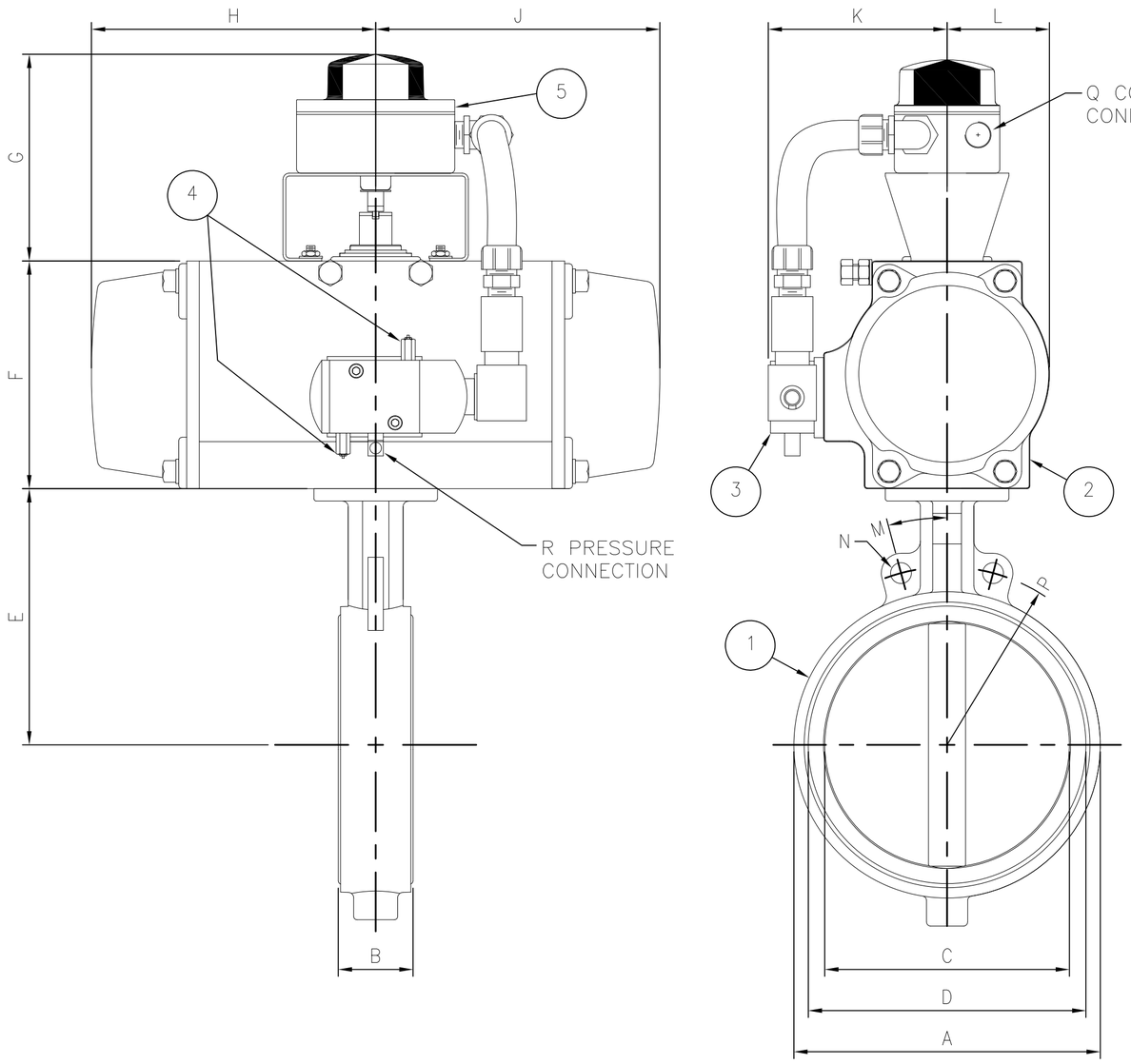

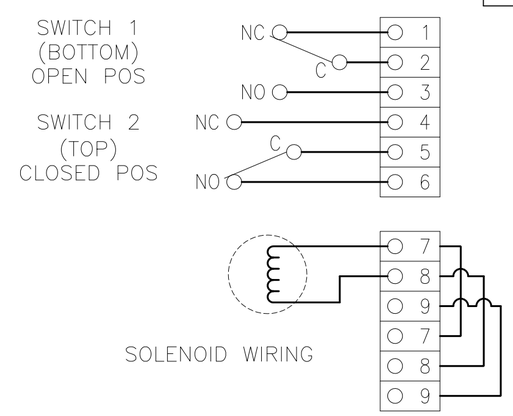

BILL OF MATERIAL

PART NO.	QTY	DESCRIPTION	
1	1	BUTTERFLY VALVE	RESILIENT SEATED, WAFER
2	1	ACTUATOR	RACK & PINION, AIR OPERATED
3	1	SOLENOID VALVE	4–WAY WITH MANUAL OVERRIDE
4	2	EXHAUST MUFFLER	W/INTEGRAL SPEED CONTROL
5	2	LIMIT SWITCH	SPDT MECHANICAL SWITCHES

NOTES:

1. DESIGN PRESSURE: 175 PSIG (1.2 Mpa)
2. DESIGN TEMPERATURE: 300° F (150° C) – EPDM SEAT
   390° F (200° C) – VITON SEAT
3. THE VALVE IS DESIGNED TO BE INSTALLED BETWEEN TWO ANSI 150# FLAT FACE WELD NECK FLANGES.
4. NO GASKETS ARE REQUIRED SINCE THE ELASTOMER SEAT ACTS AS A FLANGE GASKET.
5. INSTRUMENT AIR TO BE SUPPLIED TO THE SOLENOID AT A PRESSURE OF 60 TO 120 PSIG (415 TO 825 KPa).
6. THE SOLENOID VALVE IS RATED 120 VAC WITH A NEMA 4/4X ENCLOSURE. POWER CONSUMPTION=6.3 WATTS, 10.1VA INRUSH.
7. THE LIMIT SWITCHES ARE RATED 5 AMP @ 120/240 VAC, 0.6 AMP @ 125 VDC WITH A NEMA 4/4X ENCLOSURE.

VALVE SIZE INCHES	VALVE SIZE DN	SEAT MAT'L	ITEM NO. CLASS H COIL	ITEM NO. CLASS F COIL
2	50	EPDM	BFV02CESH	BFV02CESF
3	80	EPDM	BFV03CESH	BFV03CESF
4	100	EPDM	BFV04CESH	BFV04CESF
6	150	EPDM	BFV06CESH	BFV06CESF
8	200	EPDM	BFV08CESH	BFV08CESF
10	250	EPDM	BFV10CESH	BFV10CESF
12	300	EPDM	BFV12CESH	BFV12CESF
2	50	VITON	BFV02CVSH	BFV02CVSF
3	80	VITON	BFV03CVSH	BFV03CVSF
4	100	VITON	BFV04CVSH	BFV04CVSF
6	150	VITON	BFV06CVSH	BFV06CVSF
8	200	VITON	BFV08CVSH	BFV08CVSF
10	250	VITON	BFV10CVSH	BFV10CVSF
12	300	VITON	BFV12CVSH	BFV12CVSF

TAG NO.'S: **705, 712**
VALVE NO.'S:
1ASA-ABV-1178
1WSA-ABV-1550

REV.	DATE	REV. BY	CKD. BY	ENG. APP.	REVISION RECORD
A	6/24/10	PMD	CMH	CMH	REVISED FACE TO FACE DIMENSIONS OF VALVES

DRAWN BY	FXP	05/26/10
CHECKED BY	LJK	05/26/10
MECH. APP.	CMH	6/2/10
STRUCT. APP.		
ELECT. APP.		

Allen-Sherman-Hoff
A Division of Diamond Power International, Inc.
EXTON, PENNSYLVANIA, U.S.A.

©2010 DIAMOND POWER INTERNATIONAL, INC. ALL RIGHTS RESERVED.
THIS DRAWING IS THE PROPERTY OF DIAMOND POWER INTERNATIONAL, INC. (DPII) AND ITS USE IS GOVERNED BY THE TERMS AND CONDITIONS OF THE CONTRACT FOR WHICH IT WAS CREATED. DPII GRANTS A NON-EXCLUSIVE LICENSE TO USE, REPRODUCE AND DISTRIBUTE THIS DRAWING SOLELY FOR THE MAINTENANCE, REPAIR AND OPERATION, AND FOR SOLICITING BIDS FOR THE ERECTION OF, THE EQUIPMENT DISCLOSED HEREIN.

BUTTERFLY VALVE
CYLINDER OPERATED
W/SOLENOID & SPDT LIMIT SWITCHES

SHEET 1 OF 1

SCALE NONE
CONTRACT STD
DWG C-5682
REV A

DWG NO.: **225361-01-C-5682**

D-8085

SIZE	ACTUATOR	A	C	H	J	K	L	M	N	P	R	S	T	V	W	WEIGHT
3" [80]	MANUAL	17.63" [448]	10.00" [254]	3.00" [76]	7.50" [191]	0.36" [9]	2	5/8–11NC	4	6.00" [152]	5.00" [127]	4.00" [102]	.06" [2]	0.56" [14]	2.00" [51]	21 [10]
4" [100]	MANUAL	19.81" [503]	10.00" [254]	4.00" [102]	9.00" [229]	0.42" [11]	2	5/8–11NC	8	7.50" [191]	6.19" [157]	4.00" [102]	.06" [2]	0.69" [17]	2.00" [51]	30 [14]
6" [150]	MANUAL	27.38" [695]	16.00" [406]	6.00" [152]	11.00" [279]	0.44" [11]	2	3/4–10NC	8	9.50" [241]	8.50" [216]	7.38" [187]	.06" [2]	0.63" [16]	2.25" [57]	75 [34]
8" [200]	MANUAL	34.19" [868]	16.00" [406]	8.00" [203]	13.50" [343]	0.65" [17]	2	3/4–10NC	8	11.75" [298]	10.63" [270]	7.38" [187]	.06" [2]	0.81" [21]	2.75" [70]	95 [45]
10" [250]	MANUAL	39.63" [1006]	16.00" [406]	10.00" [254]	16.00" [406]	0.56" [14]	4	7/8–9NC	12	14.25" [362]	12.75" [324]	7.38" [187]	.06" [2]	0.94" [24]	2.75" [70]	139 [63]
12" [300]	MANUAL	46.25" [1175]	20.00" [508]	12.00" [305]	19.00" [483]	0.50" [13]	4	7/8–9NC	12	17.00" [432]	15.00" [381]	7.50" [191]	.19" [5]	1.00" [25]	3.00" [76]	197 [87]

DIMENSIONS IN INCHES [MILLIMETERS]. WEIGHTS IN LB [KG].

BILL OF MATERIAL

PART NO.	QTY.	DESCRIPTION	MATERIAL
1	1	VALVE BODY	304 STAINLESS STEEL
2	1	SEAT	EPDM OR VITION
3	1	VALVE GATE	304 STAINLESS STEEL
4	1	YOKE	DUCTILE IRON (4" ONLY)/CARBON STEEL
5	3	PACKING	ACRYLIC/SILICONE
6	1	PACKING FOLLOWER	DUCTILE IRON
7	1	HANDWHEEL	CAST IRON

NOTES

1. DESIGN PRESSURE: 132 PSIG [910 kPa] @ 280°F [138°C] – EPDM SEAT
   123 PSIG [848 kPa] @ 350°F [177°C] – VITON SEAT

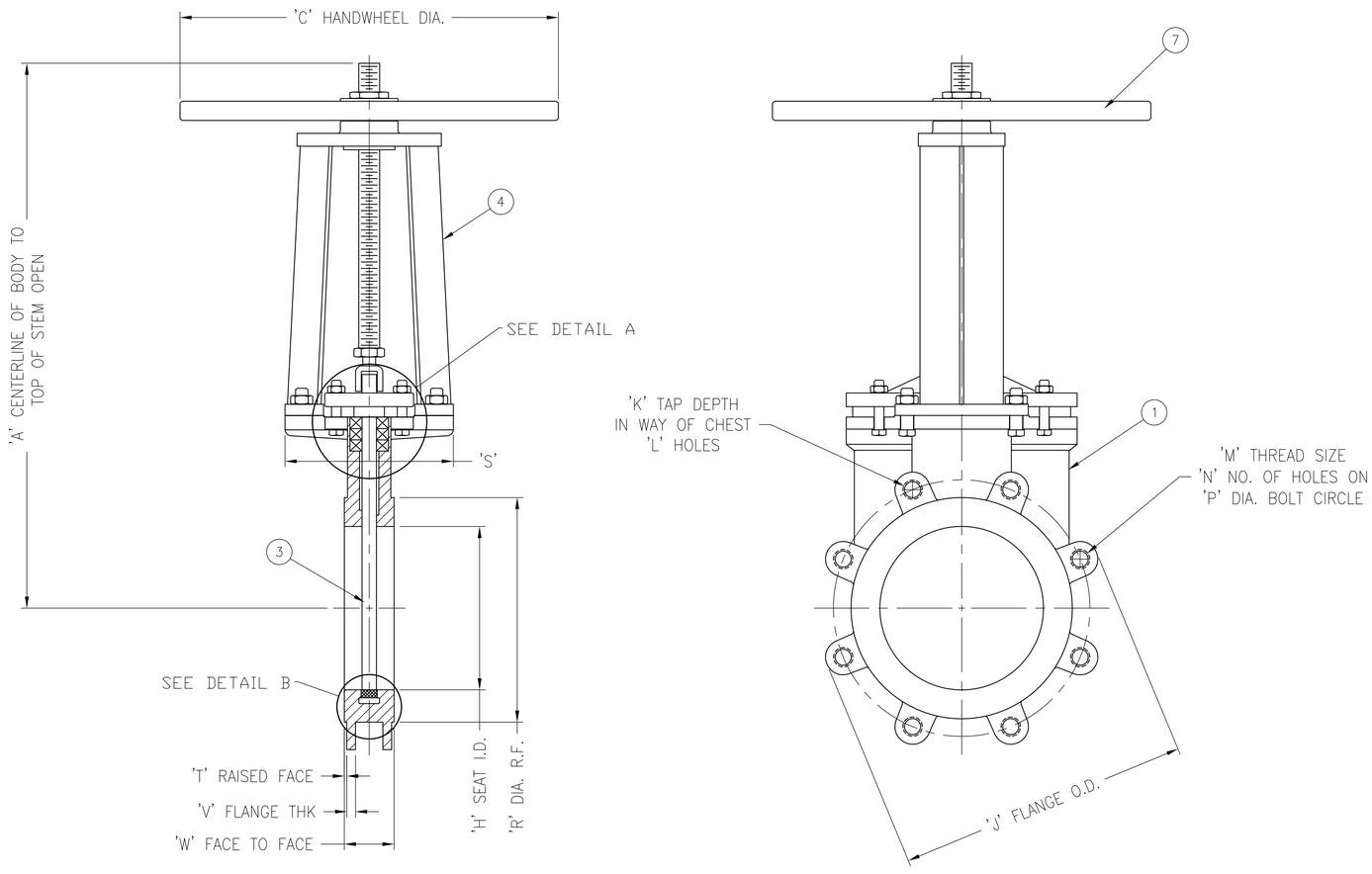

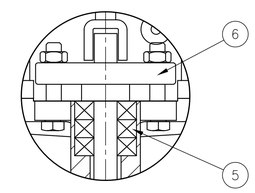

DETAIL A

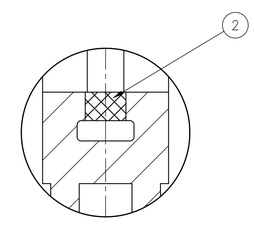

DETAIL B

TAG NO.: **749**
VALVE NO.'S:
1ASA-BV-1171
1ASA-BV-1172
1ASA-BV-1173
1ASA-BV-1174

	EPDM SEAT	VITON SEAT
	TEMP. RATING 280°F [138°C]	TEMP. RATING 350°F [177°C]
SIZE	ITEM NO.	ITEM NO.
3" [80]	T–KGVBD03H	T–KGVBD03HV
4" [100]	T–KGVBD04H	T–KGVBD04HV
6" [150]	T–KGVBD06H	T–KGVBD06HV
8" [200]	T–KGVBD08H	T–KGVBD08HV
10" [250]	T–KGVBD10H	T–KGVBD10HV
12" [300]	T–KGVBD12H	T–KGVBD12HV

REFERENCES

DWG.	TITLE

REVISIONS

REV.	DATE	REV. BY	CKD. BY	ENG. APP.	ENG. APP.	REVISION RECORD

DRAWN BY	JDL	11/21/13
CHECKED BY	CMH	11/21/13
MECH. APP.	JDL	11/21/13
STRUCT. APP.		
ELECT. APP.		

Allen-Sherman-Hoff
A Division of Diamond Power International, Inc.
EXTON, PENNSYLVANIA, U.S.A.

©2010 DIAMOND POWER INTERNATIONAL, INC. ALL RIGHTS RESERVED.
THIS DRAWING IS THE PROPERTY OF DIAMOND POWER INTERNATIONAL, INC. (DPI) AND ITS USE IS GOVERNED BY THE TERMS AND CONDITIONS OF THE CONTRACT FOR WHICH IT WAS CREATED. DPI GRANTS A NON–EXCLUSIVE LICENSE TO USE, REPRODUCE AND DISTRIBUTE THIS DRAWING SOLELY FOR THE MAINTENANCE, REPAIR AND OPERATION, AND FOR SOLICITING BIDS FOR THE ERECTION OF, THE EQUIPMENT DISCLOSED HEREIN.

KNIFEGATE VALVES (3"–12")
HANDWHEEL OPERATED
BI–DIRECTIONAL
STAINLESS STEEL BODY
STANDARD PACKING

SHEET 1 OF 1

SCALE N.A.
CONTRACT STD
DWG D–8085
REV

DWG NO.: **225361-01-D-8085**

D-8101

SIZE	ACTUATOR	A	C	D	E	H	J	K	L	M	N	P	R	T	V	W	WEIGHT
3" [80]	3.25 DOUBLE ACTING	19.38" [492]	4.00" [102]	2.00" [51]	5.50" [140]	3.00" [76]	7.50" [191]	0.40" [9]	2	5/8-11NC	4	6.00" [152]	5.00" [127]	.06" [2]	0.56" [14]	2.00" [51]	28 [13]
4" [100]	5 DOUBLE ACTING	22.13" [561]	5.50" [140]	2.75" [70]	6.25" [159]	4.00" [102]	9.00" [229]	0.42" [11]	2	5/8-11NC	8	7.50" [191]	6.19" [157]	.06" [2]	0.69" [17]	2.00" [51]	37 [17]
6" [150]	6 DOUBLE ACTING	29.94" [760]	6.50" [165]	3.25" [83]	6.75" [172]	6.00" [152]	11.00" [279]	0.44" [11]	2	3/4-10NC	8	9.50" [241]	8.50" [216]	.06" [2]	0.63" [16]	2.25" [57]	94 [43]
8" [200]	8 DOUBLE ACTING	36.88" [937]	8.63" [219]	4.32" [110]	7.82" [199]	8.00" [203]	13.50" [343]	0.66" [17]	2	3/4-10NC	8	11.75" [298]	10.63" [270]	.06" [2]	0.81" [21]	2.75" [70]	114 [52]
10" [250]	8 DOUBLE ACTING	41.44" [1053]	8.63" [219]	4.32" [110]	7.82" [199]	10.00" [254]	16.00" [406]	0.56" [14]	4	7/8-9NC	12	14.25" [362]	12.75" [324]	.06" [2]	0.94" [24]	2.75" [70]	178 [81]
12" [300]	8 DOUBLE ACTING	48.00" [1219]	8.63" [219]	4.32" [110]	7.82" [199]	12.00" [305]	19.00" [483]	0.50" [13]	4	7/8-9NC	12	17.00" [432]	15.00" [381]	.19" [5]	1.00" [25]	3.00" [76]	236 [107]

DIMENSIONS IN INCHES [MILLIMETERS]. WEIGHTS IN LB [KG].

BILL OF MATERIAL

PART NO.	QTY.	DESCRIPTION	MATERIAL
1	1	VALVE BODY	304 STAINLESS STEEL
2	1	SEAT	EPDM OR VITON
3	1	VALVE GATE	304 STAINLESS STEEL
4	1	YOKE	CARBON STEEL
5	3	PACKING	ACRYLIC/SILICONE
6	1	PACKING FOLLOWER	DUCTILE IRON
7	1	PNEUMATIC CYLINDER	ALUMINUM W/ COPPER TUBE & FITTINGS
8	1	SOLENOID VALVE	4-WAY, 120/60 Hz, BRASS BODY
9	2	SWITCH	DPDT LIMIT SWITCH

TAG NO.'S: **704, 706, 708**
VALVE NO.'S:
1ASA-ABV-1170
1ASA-BV-1180
1ASA-BV-1182
1ASA-BV-1183
1ASA-BV-1185

NOTES
1. DESIGN PRESSURE: 132 PSIG [910 kPa] @ 280°F [138°C] – EPDM SEAT
   123 PSIG [848 kPa] @ 350°F [177°C] – VITON SEAT
2. AIR PRESSURE REQUIRED: 60–125 PSI [414–862 kPa]
3. ELECTRICAL ENCLOSURE FOR SOLENOID & LIMIT SWITCHES: NEMA 4/4X

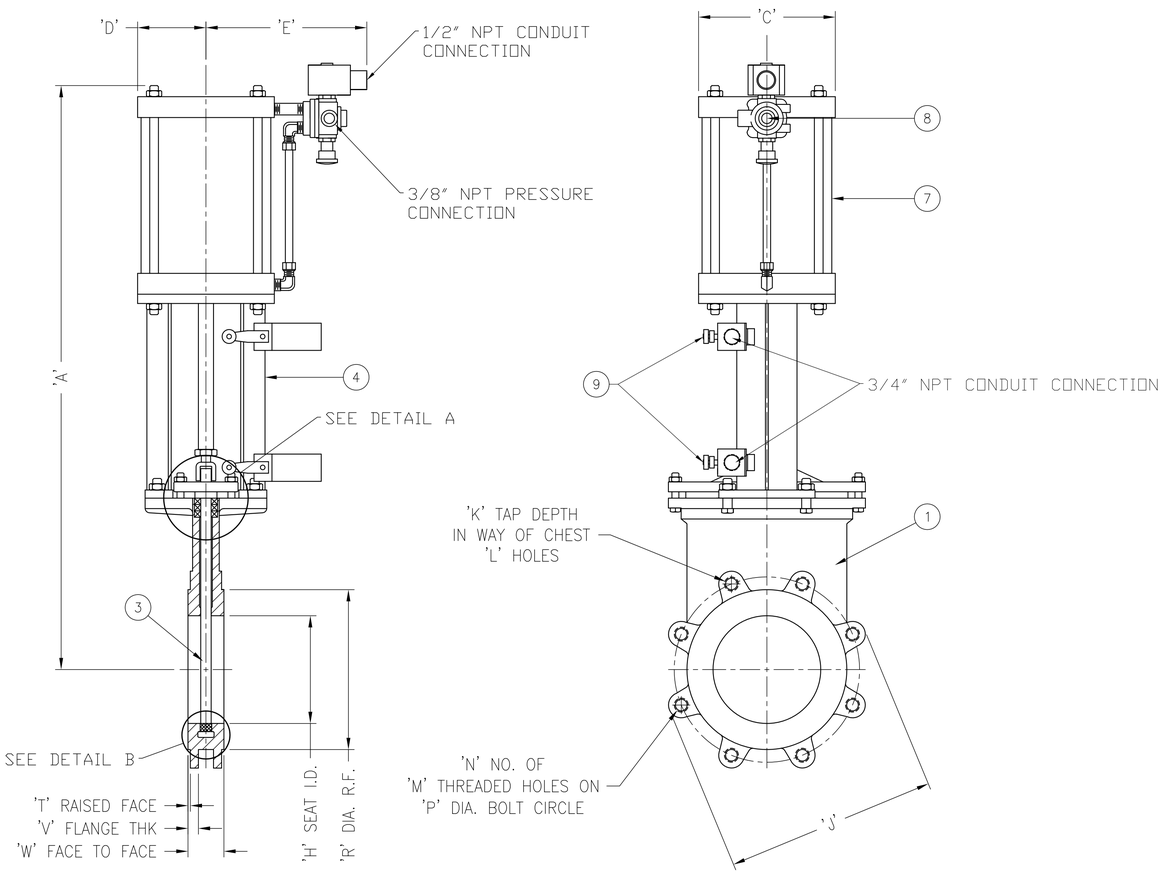

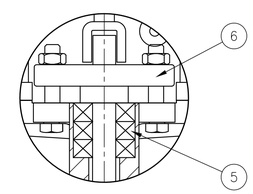

DETAIL A

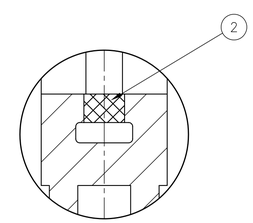

DETAIL B

LIMIT SWITCH ELECTRICAL RATING (TYPICAL BOTH SWITCHES)			
AC VOLTS – PILOT DUTY: 600VAC, 720VA			
		AMPS AT 0.35 POWER FACTOR	
CIRCUITRY	VOLTAGE	MAKE	BREAK
DOUBLE-POLE DOUBLE-THROW	120	30	3
	240	15	1.5
	480	7.5	0.75
	600	6	0.60
DC VOLTS – PILOT DUTY: 240VDC, 30 WATTS			
		MAKE AND BREAK AMPS	
CIRCUITRY	VOLTAGE	INDUCTIVE	RESISTIVE
DOUBLE-POLE DOUBLE-THROW	120	0.25	0.8
	240	0.15	0.4

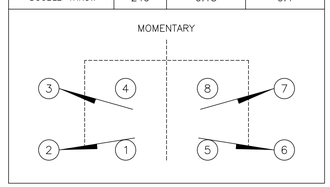

SOLENOID VALVE		
WATT RATING AND POWER CONSUMPTION		
VOLTAGE: 120/60		
WATTS	VA HOLDING	VA INRUSH
20.1	45	140

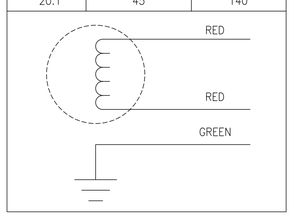

NOMINAL AMBIENT TEMP. RANGES:
CLASS F: 32°F–125°F [0°C–52°C]
CLASS H: 32°F–140°F [0°C–60°C]

	SEAT (EPDM)	
	TEMPERATURE RATING 280°F [138°C]	
	CLASS F SOLENOID COIL INSULATION	CLASS H SOLENOID COIL INSULATION
SIZE	ITEM NO.	ITEM NO.
3" [80]	T-KGVBD03CLDAF	T-KGVBD03CLDAH
4" [100]	T-KGVBD04CLDAF	T-KGVBD04CLDAH
6" [150]	T-KGVBD06CLDAF	T-KGVBD06CLDAH
8" [200]	T-KGVBD08CLDAF	T-KGVBD08CLDAH
10" [250]	T-KGVBD10CLDAF	T-KGVBD10CLDAH
12" [300]	T-KGVBD12CLDAF	T-KGVBD12CLDAH

	SEAT (VITON)	
	TEMPERATURE RATING 350°F [177°C]	
	CLASS F SOLENOID COIL INSULATION	CLASS H SOLENOID COIL INSULATION
SIZE	ITEM NO.	ITEM NO.
3" [80]	T-KGVBD03CLDAFV	T-KGVBD03CLDAHV
4" [100]	T-KGVBD04CLDAFV	T-KGVBD04CLDAHV
6" [150]	T-KGVBD06CLDAFV	T-KGVBD06CLDAHV
8" [200]	T-KGVBD08CLDAFV	T-KGVBD08CLDAHV
10" [250]	T-KGVBD10CLDAFV	T-KGVBD10CLDAHV
12" [300]	T-KGVBD12CLDAFV	T-KGVBD12CLDAHV

REFERENCES

DWG.	TITLE

REVISIONS

REV.	DATE	REV. BY	CKD. BY	ENG. APP.	ENG. APP.	REVISION RECORD

DRAWN BY	JDL	12/11/13
CHECKED BY	MAH	01/30/14
MECH. APP.	JDL	01/30/14
STRUCT. APP.		
ELECT. APP.		

Allen-Sherman-Hoff
A Division of Diamond Power International, Inc.
EXTON, PENNSYLVANIA, U.S.A.

©2010 DIAMOND POWER INTERNATIONAL, INC. ALL RIGHTS RESERVED.
THIS DRAWING IS THE PROPERTY OF DIAMOND POWER INTERNATIONAL, INC. (DPII) AND ITS USE IS GOVERNED BY THE TERMS AND CONDITIONS OF THE CONTRACT FOR WHICH IT WAS CREATED. DPII GRANTS A NON-EXCLUSIVE LICENSE TO USE, REPRODUCE AND DISTRIBUTE THIS DRAWING SOLELY FOR THE MAINTENANCE, REPAIR AND OPERATION, AND FOR SOLICITING BIDS FOR THE ERECTION OF, THE EQUIPMENT DISCLOSED HEREIN.

BI-DIRECTIONAL KNIFE GATE VALVES
CYLINDER OPERATED (3"–12")
W/ 2 DPDT LIMIT SWITCHES
STAINLESS STEEL BODY
STANDARD PACKING

SHEET 1 OF 1

SCALE N/A
CONTRACT STD
DWG D-8101
REV

DWG NO.: **225361-01-D-8101**

225361-01-E145-01

STRUCTURAL GENERAL NOTES

1. STRUCTURAL DENSITY OF PYRITES ASH = 95 PCF.
   STRUCTURAL DENSITY OF BOTTOM ASH = 65 PCF.

2. ALL MATERIAL SHOWN ON THE DRAWINGS IS FURNISHED BY A-S-H UNLESS NOTED OTHERWISE.
   MATERIAL NOTED AS (NF) IS NOT FURNISHED BY A-S-H.

3. ALL WIDE FLANGE STRUCTURAL STEEL SHAPES SHALL CONFORM TO ASTM A992 UNLESS NOTED OTHERWISE.
   ALL CHANNELS, ANGLES AND PLATES SHALL CONFORM TO ASTM A36 UNLESS NOTED OTHERWISE.
   ALL HOLLOW STRUCTURAL SECTIONS (HSS) SHALL CONFORM TO ASTM A500 GRADE B, UNLESS NOTED OTHERWISE.

4. ALL CONCRETE SHALL HAVE A MINIMUM COMPRESSIVE STRENGTH OF 4000 PSI AT 28 DAYS.

5. ALL GROOVE WELDS SHALL BE COMPLETE PENETRATION, UNLESS NOTED OTHERWISE.
   ALL WELDING PROCEDURES SHALL CONFORM TO AWS D1.1 "STRUCTURAL WELDING CODE-STEEL".
   ALL SHOP WELDING SHALL BE PERFORMED BY WELDERS CERTIFIED IN ACCORDANCE WITH THE AMERICAN WELDING SOCIETY'S STANDARD QUALIFICATION PROCEDURE TO PERFORM THE TYPE OF WORK REQUIRED.

6. THE FOLLOWING MATERIAL SHALL BE HOT-DIPPED GALVANIZED PER ASTM A123: STRUCTURAL STEEL, PIPE SUPPORTS

7. ALL GALVANIZED MATERIAL SHALL BE BOLTED TO PAINTED MATERIAL.

8. GALVANIZED STRUCTURAL HIGH-STRENGTH BOLTS, NUTS, AND REQUIRED WASHERS MUST BE CONSIDERED AS A MANUFACTURED FASTENER ASSEMBLY. GALVANIZED HIGH-STRENGTH BOLTS AND GALVANIZED NUTS SHALL BE PURCHASED FROM A SINGLE SUPPLIER. NUTS ARE TO RECEIVE A VISIBLE COLOR DYE LUBRICANT. THE FABRICATOR IS REQUIRED TO ASSEMBLE A GALVANIZED BOLT AND LUBRICATED GALVANIZED NUT IN A STEEL JOINT WITH A GALVANIZED WASHER AND SUBMIT THE ROTATIONAL CAPACITY TESTS FOR THE BOLT ASSEMBLIES PRIOR TO SHIPMENT. HIGH-STRENGTH BOLTS, NUTS, AND REQUIRED WASHERS MUST BE ASSEMBLED AND BE SHIPPED TOGETHER IN THE SAME CONTAINER.

9. NON-SHRINK GROUT FOR BASEPLATE AND EQUIPMENT BASES SHALL BE PREPACKAGED, NON-SHRINK, NON-METALLIC, NON-GASEOUS, EXTENDED FLOW, CEMENT BASED GROUTING MATERIAL CONFORMING TO: CRD C621, US ARMY CORPS OF ENGINEERS SPECIFICATION FOR NON-SHRINK GROUT AND ASTM C1107, STANDARD SPECIFICATION FOR PACKAGED, DRY, HYDRAULIC-CEMENT GROUT (NON-SHRINK).

DESIGN CRITERIA

ASCE 7-16

	RISK CATEGORY	III
WIND	BASIC WIND SPEED	120 MPH
WIND	EXPOSURE CATEGORY	C
WIND	WIND DIRECTIONALITY FACTOR	0.85
WIND	TOPOGRAPHIC FACTOR	1.00
SEISMIC	SEISMIC IMPORTANCE FACTOR	1.25
SEISMIC	SITE CLASS	D
SEISMIC	SITE ACCELERATION PARAMETER, S_S	0.078
SEISMIC	SITE ACCELERATION PARAMETER, S_1	0.041
SEISMIC	DESIGN ACCELERATION PARAMETER, S_{DS}	0.083
SEISMIC	DESIGN ACCELERATION PARAMETER, S_{D1}	0.066
SEISMIC	SEISMIC PERFORMANCE CATEGORY	A
SEISMIC	RESPONSE MODIFICATION FACTOR, R	3.0
SEISMIC	RESPONSE COEFFICIENT, C_S	0.035
SEISMIC	ANALYSIS PROCEDURE	ELF
SEISMIC	BASIC SEISMIC FORCE RESISTING SYSTEM	STEEL NOT DETAILED FOR SEISMIC
SNOW	GROUND SNOW LOAD	25 PSF
SNOW	SNOW IMPORTANCE FACTOR	1.10
SNOW	EXPOSURE FACTOR, C_E	1.0
SNOW	THERMAL FACTOR, C_T	1.2
ICE	NOMINAL ICE THICKNESS	1.00 IN
ICE	CONCURRENT WIND SPEED	50 MPH
ICE	CONCURRENT TEMPERATURE	-5 °F
ICE	TOPOGRAPHIC FACTOR	1.00
ICE	ICE IMPORTANCE FACTOR-THICKNESS	1.25
ICE	ICE IMPORTANCE FACTOR-WIND	1.00

REVISIONS

REV.	DATE	REV. BY	CKD. BY	ENG. APP.	ENG. APP.	REVISION RECORD
A	10/24/25	KBJ		KBJ		INITIAL ISSUE

DRAWN BY	KBJ	10/24/25
CHECKED BY		
MECH. APP.		
STRUCT. APP.	KBJ	10/24/25
ELECT. APP.		

Allen-Sherman-Hoff
The Babcock & Wilcox Company
Exton, Pennsylvania, U.S.A.

©2023 THE BABCOCK AND WILCOX COMPANY ALL RIGHTS RESERVED.
THIS DRAWING IS THE PROPERTY OF THE BABCOCK AND WILCOX COMPANY (B&W) AND ITS USE IS GOVERNED BY THE TERMS AND CONDITIONS OF THE CONTRACT FOR WHICH IT WAS CREATED. B&W GRANTS A NON-EXCLUSIVE LICENSE TO USE, REPRODUCE AND DISTRIBUTE THIS DRAWING SOLELY FOR THE MAINTENANCE, REPAIR AND OPERATION, AND FOR SOLICITING BIDS FOR THE ERECTION OF, THE EQUIPMENT DISCLOSED HEREIN.

STRUCTURAL GENERAL NOTES

CITY OF HASTINGS
WHELAN ENERGY CENTER
B.A. WATER RECIRCULATION SYSTEM
UNIT 1
HASTINGS, NEBRASKA

SCALE
CONTRACT 225361-01
DWG 225361-01-E145-01
REV A

PIPE SUPPORT GENERAL NOTES

1. ALL PRE-FABRICATED PIPE SUPPORT ASSEMBLIES SHALL BE PER MANUFACTURER'S STANDARDS. MANUFACTURER'S STANDARDS SHALL BE APPROVED BY ALLEN-SHERMAN-HOFF (A-S-H) PRIOR TO FABRICATION.
2. MATERIAL NOTED AS (NF) IS NOT FURNISHED BY ALLEN-SHERMAN-HOFF (A-S-H) ALL MATERIAL SHOWN SHALL BE FURNISHED BY A-S-H UNLESS NOTED AS (NF).
3. PIPE SUPPORTS FOR PIPING LESS THAN 3" NOMINAL DIAMETER ARE NOT FURNISHED (NF) AND SHALL BE PROVIDED IN THE FIELD BY THE PIPING ERECTOR/PIPE SUPPORT INSTALLER UNLESS NOTED OTHERWISE.
4. REFER TO THE STRUCTURAL GENERAL NOTES DRAWING 225361-01-E145-01 FOR ADDITIONAL INFORMATION.

PIPE SUPPORT INSTALLATION NOTES

1. FIELD TO MODIFY GRATING AND/OR HANDRAILS AS REQUIRED TO ACCOMMODATE PIPING AND PIPE SUPPORTS.

PIPE SUPPORT DETAILING NOTES

1. ALL SUPPORT ASSEMBLIES SHALL BE SHOP WELDED UNLESS MARKED FOR FIELD WELDING.
2. ALL SHOP AND FIELD WELDING SHALL BE 3/16" FILLET ALL AROUND UNLESS NOTED OTHERWISE.
3. ALL BOLT HOLE DIAMETERS FOR U-BOLTS AND A325 BOLTS TO BE 1/16" LARGER THAN BOLT DIAMETER, UNLESS NOTED OTHERWISE.
4. ALL HOLES FOR ANCHOR BOLTS AND EXPANSION ANCHORS TO BE 3/16" LARGER THAN BOLT DIAMETER, UNLESS NOTED OTHERWISE.
5. ALL HOLES FOR U-BOLTS, A325 BOLTS AND STRAP ANCHORS SHALL BE LOCATED ON GAGE LINE OF THE STRUCTURAL MEMBER UNLESS NOTED OTHERWISE.
6. VENT HOLES SHALL BE PROVIDED FOR ALL HOLLOW (PIPE OR HSS) PIPE SUPPORT STUB-UPS AND SHALL BE 1/4" DIAMETER UNLESS NOTED OTHERWISE.

PIPE SUPPORT TAGGING, MARK NUMBERS, AND ASSEMBLY

1. EACH PIPE SUPPORT SHALL BE ONE A-S-H SHIP UNIT MARK NUMBER (EX: PS-1-190-001). ALL SHOP ASSEMBLED PIECES ASSOCIATED WITH THE PIPE SUPPORT SHALL BE PACKAGED, CRATED OR BANDED TOGETHER. CONSISTENT WITH SHIPPING LIMITATIONS TO THE JOB SITE TO THE MAXIMUM EXTENT PRACTICABLE, PIPE SUPPORTS SHALL BE "PRE-ASSEMBLED" IN THE VENDORS SHOP. IF ITEMS OF THE SAME SUPPORT ARE REQUIRED TO BE SHIPPED SEPARATE (EX. LARGE COMPONENT AND A CRATE) THEN EACH PACKAGE OR CRATE MUST BE CLEARLY MARKED WITH THE A-S-H SHIP UNIT MARK NUMBER AND QUANTITY (EX. 1 OF 2, 2 OF 2) SO THAT FIELD PERSONNEL CAN READILY ASSOCIATE EACH ITEM TO THE PROPER SUPPORT FOR INSTALLATION.

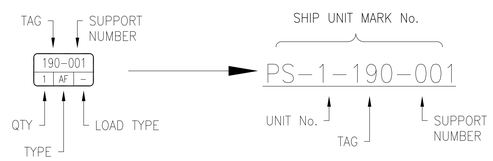

2. EACH ITEM OR SHOP ASSEMBLY WILL BE IDENTIFIED ON THE DRAWING WITH A PIECE NUMBER (#). EACH ITEM OR SHOP ASSEMBLY SHALL BE MARKED FOR SHIPMENT WITH THE ITEM MARK NUMBER. THE ITEM MARK NUMBER SHALL BE THE A-S-H SHIP UNIT MARK NUMBER SUFFIXED WITH THE PIECE NUMBER (Ex: PS-1-190-001-1). COMPONENTS OF A SHOP ASSEMBLED ITEM WILL BE LABELED ON THE DRAWING WITH A PIECE MARK. THE PIECE MARK WILL BE PREFIXED WITH THE CONNECTED SHOP ASSEMBLY'S PIECE NUMBER AND SUFFIXED WITH A IDENTIFYING LETTER (Ex: 1a). PIECE MARKS ARE NOT REQUIRED TO BE MARKED BY THE SHOP. A SUPPORT WITH ONLY (1) ITEM MAY BE TAGGED WITH ONLY THE A-S-H SHIP UNIT MARK No (Ex: PS-1-190-001).

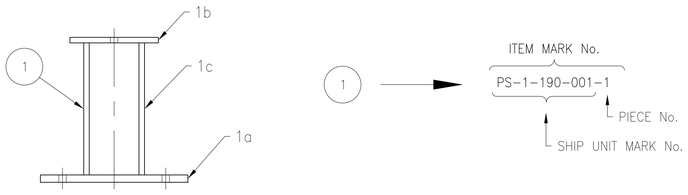

PIPE SUPPORT U-BOLT INSTALLATION

1. U-BOLT GUIDE ASSEMBLIES SHALL BE INSTALLED WITH 1/16" CLEARANCE ALL AROUND UNLESS OTHERWISE NOTED (U.N.O.).
2. U-BOLT AND STRAP ANCHORS SHALL HAVE U-BOLT AND STRAP TIGHT AGAINST PIPE.

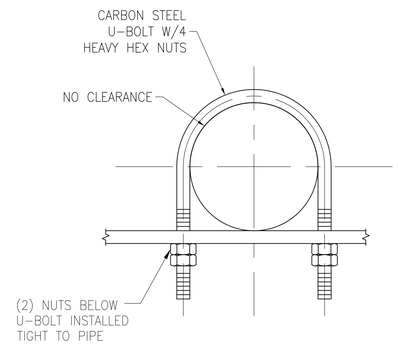

ANCHOR

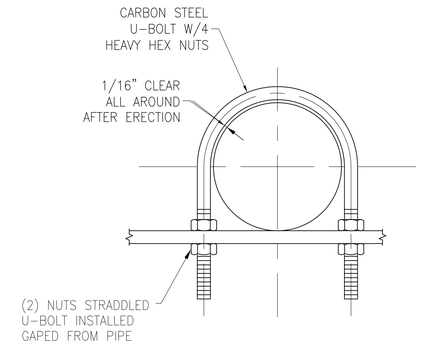

GUIDE

PIPE SUPPORT TYPE LEGEND

AF	= ANCHOR FROM FIXED STEEL OR CONCRETE	AH	= ANCHOR FROM HOPPER BOTTOM
GF	= GUIDE FROM FIXED STEEL OR CONCRETE	GH	= AXIAL GUIDE FROM HOPPER BOTTOM
SF	= SUPPORT FROM FIXED STEEL OR CONCRETE	GPH	= AXIAL GUIDE WITH LATERAL PIVOTING FROM HOPPER BOTTOM
GPF	= AXIAL GUIDE WITH LATERAL PIVOTING FROM FIXED STEEL OR CONCRETE	SH	= SUPPORT FROM HOPPER BOTTOM

STANDARD U-BOLT DIMENSIONS FOR ASHCOLITE PIPE FITTINGS

NOMINAL PIPE DIAMETER	(IN)	4	5	6	7	8	9	10	11	12	14	16	18
A	(IN)	1/2	5/8	5/8	5/8	3/4	3/4	1	1	1	1	1	1
B	(IN)	3 1/16	3 5/8	4 1/4	4 7/8	5 7/16	5 15/16	6 5/8	7 1/8	7 11/16	8 11/16	9 3/4	10 13/16
C	(IN)	4	4	4	4	5	5	6	6	6	6	6	6
D	(IN)	5	5 7/8	6 1/2	7 1/16	8 1/16	8 7/16	9 7/8	10 3/8	11	11 13/16	13	14 1/4
R	(IN)	2 13/16	3 5/16	3 15/16	4 9/16	5 1/16	5 9/16	6 1/8	6 5/8	7 3/16	8 3/16	9 1/4	10 5/16
WEIGHT (INCLUDING NUTS)	(LBS)	1.4	2.5	2.8	3.0	4.9	5.2	10.7	11.3	12.1	13.0	14.3	15.6

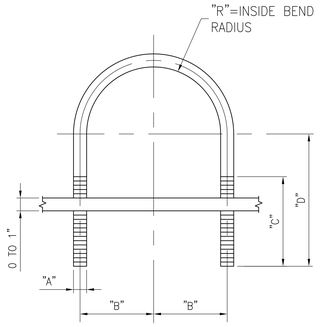

STANDARD U-BOLT DIMENSIONS FOR ASHCOLITE PIPE

NOMINAL PIPE DIAMETER	(IN)	4	5	6	7	8	9	10	11	12	14	16	18
A	(IN)	1/2	5/8	5/8	5/8	3/4	3/4	1	1	1	1	1	1
B	(IN)	2 13/16	3 3/8	3 15/16	4 9/16	5 1/16	5 5/8	6 1/4	6 15/16	7 5/16	8 3/16	9 1/4	10 5/16
C	(IN)	4	4	4	4	5	5	6	6	6	6	6	6
D *	(IN)	5	5 1/2	6 1/4	7 1/16	8 1/16	8 7/16	9 7/16	10 3/8	10 5/8	11 13/16	12 3/4	13 3/4
R	(IN)	2 9/16	3 1/16	3 5/8	4 1/4	4 11/16	5 1/4	5 3/4	6 7/16	6 13/16	7 11/16	8 3/4	9 13/16
WEIGHT (INCLUDING NUTS)	(LBS)	1.4	2.5	2.6	3.0	4.8	5.1	10.3	11.2	11.6	12.7	13.9	15.0

* FOR INSULATED PIPE DETAILED UTILIZING A KNIFE PLATE ADD 3" TO THE 'D' DIMENSION (U.N.O.)

REVISIONS

REV.	DATE	REV. BY	CKD. BY	ENG. APP.	ENG. APP.	REVISION RECORD
A	11/21/25	KBJ		KBJ		INITIAL ISSUE

DRAWN BY	KBJ	11/21/25
CHECKED BY		
MECH. APP.		
STRUCT. APP.	KBJ	11/21/25
ELECT. APP.		

Allen-Sherman-Hoff
The Babcock & Wilcox Company
Exton, Pennsylvania, U.S.A.

© 2023 THE BABCOCK AND WILCOX COMPANY ALL RIGHTS RESERVED.
THIS DRAWING IS THE PROPERTY OF THE BABCOCK AND WILCOX COMPANY (B&W) AND ITS USE IS GOVERNED BY THE TERMS AND CONDITIONS OF THE CONTRACT FOR WHICH IT WAS CREATED. B&W GRANTS A NON-EXCLUSIVE LICENSE TO USE, REPRODUCE AND DISTRIBUTE THIS DRAWING SOLELY FOR THE MAINTENANCE, REPAIR AND OPERATION, AND FOR SOLICITING BIDS FOR THE ERECTION OF, THE EQUIPMENT DISCLOSED HEREIN.

PIPE SUPPORT GENERAL NOTES

CITY OF HASTINGS
WHELAN ENERGY CENTER
BOTTOM ASH CONVEYOR SYSTEM MODIFICAITON
UNIT 1
HASTINGS, NEBRASKA

CUST. DWG.

SCALE
CONTRACT 225361-01
DWG 225361-01-E189-01
REV A

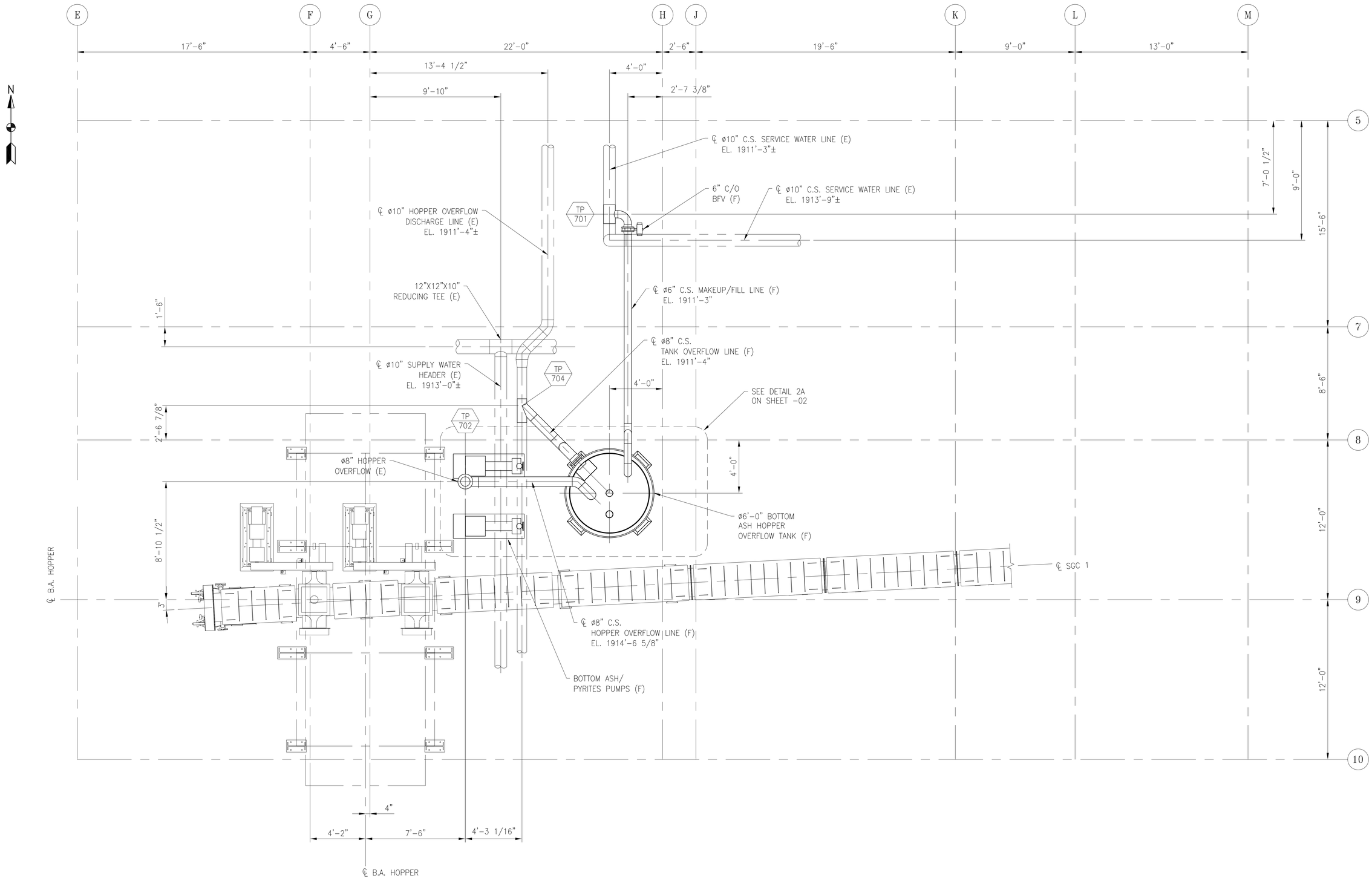

PLAN 1A -01

REV.	DATE	REV. BY	CKD. BY	ENG. APP.	ENG. APP.	REVISION RECORD
B	11/19/25	JT	RJK	RJK		GENERAL REVISION
A	10/10/25	JT	RJK	RJK		INITIAL ISSUE

REVISIONS

DRAWN BY	JT	10/10/25
CHECKED BY	RJK	10/10/25
MECH. APP.	RJK	10/10/25
STRUCT. APP.		
ELECT. APP.		

Allen-Sherman-Hoff
The Babcock & Wilcox Company
Exton, Pennsylvania, U.S.A.

©2023 THE BABCOCK AND WILCOX COMPANY ALL RIGHTS RESERVED.
THIS DRAWING IS THE PROPERTY OF THE BABCOCK AND WILCOX COMPANY (B&W) AND ITS USE IS GOVERNED BY THE TERMS AND CONDITIONS OF THE CONTRACT FOR WHICH IT WAS CREATED. B&W GRANTS A NON-EXCLUSIVE LICENSE TO USE, REPRODUCE AND DISTRIBUTE THIS DRAWING SOLELY FOR THE MAINTENANCE, REPAIR AND OPERATION, AND FOR SOLICITING BIDS FOR THE ERECTION OF, THE EQUIPMENT DISCLOSED HEREIN.

GENERAL ARRANGEMENT
RECIRCULATION PUMP SYSTEM
SGC 1
UNIT 1

CITY OF HASTINGS
WHELAN ENERGY CENTER
BOTTOM ASH CONVEYOR SYSTEM MODIFICAITON
UNIT 1
HASTINGS, NEBRASKA

CUST. DWG.

SCALE 3/8"=1'-0"
CONTRACT 225361-01
DWG 225361-01-E701-01
REV B

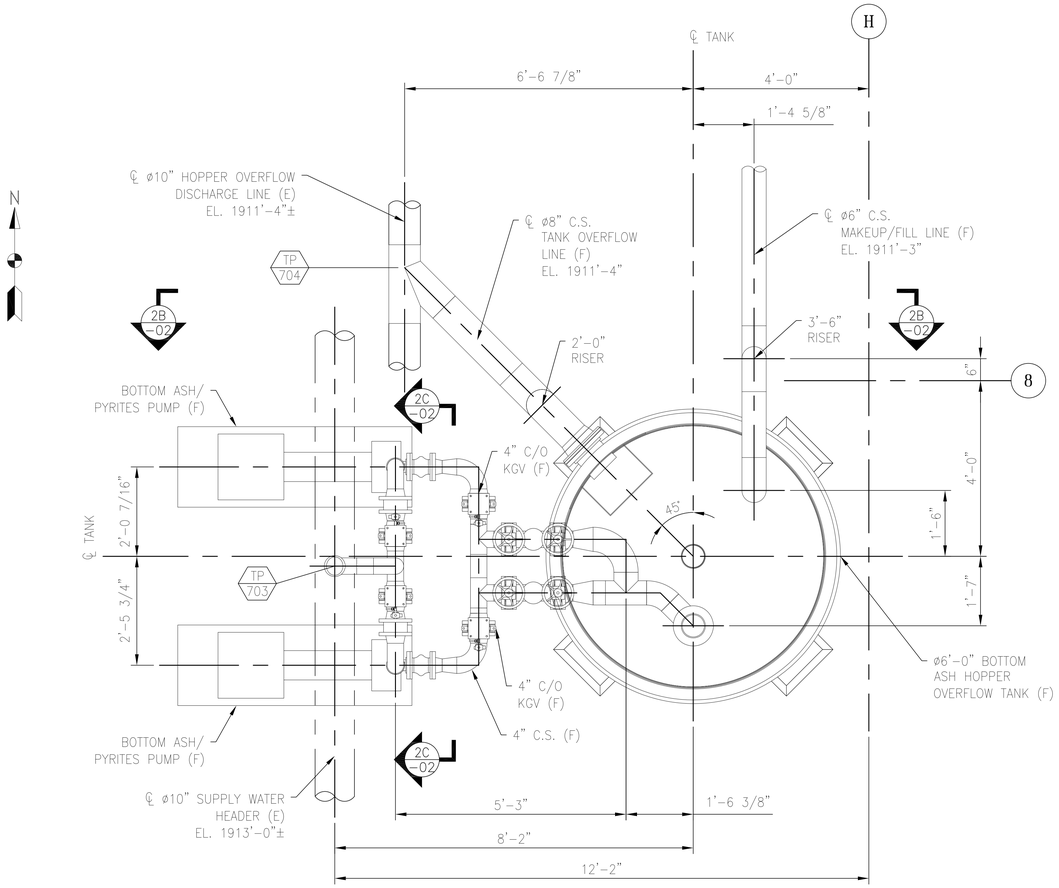

DETAIL 2A -01

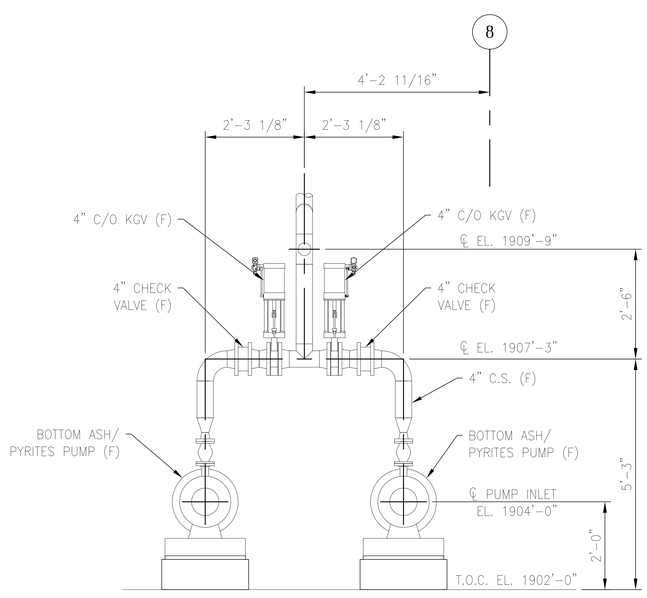

SECTION 2C -02
LOOKING WEST

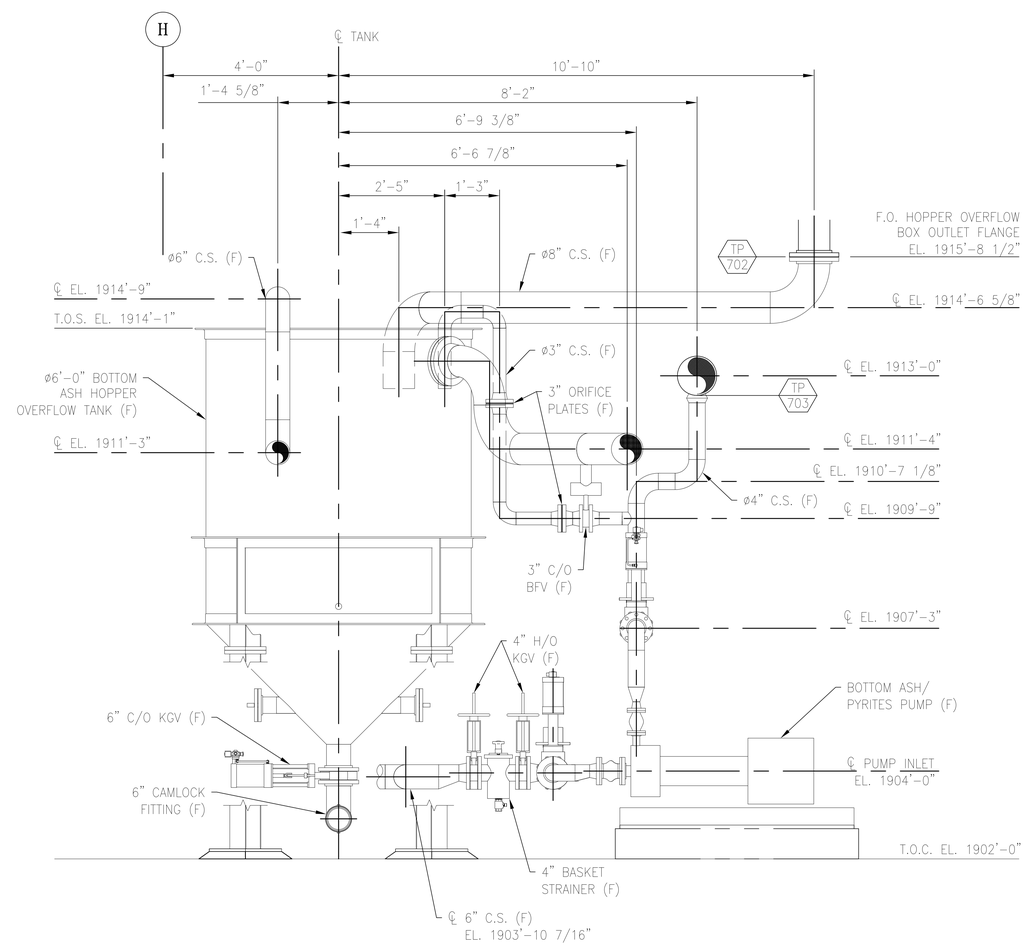

ELEVATION 2B -02
LOOKING SOUTH

REVISIONS							
C	12/10/25	RJK				REVISED PER CUSTOMER COMMENTS	
B	11/19/25	JT	RJK	RJK		GENERAL REVISION	
A	10/10/25	JT	RJK	RJK		INITIAL ISSUE	
REV.	DATE	REV. BY	CKD. BY	ENG. APP.	ENG. APP.	REVISION RECORD	

DRAWN BY	JT	10/10/25
CHECKED BY	RJK	10/10/25
MECH. APP.	RJK	10/10/25
STRUCT. APP.		
ELECT. APP.		

Allen-Sherman-Hoff
The Babcock & Wilcox Company
Exton, Pennsylvania, U.S.A.

©2023 THE BABCOCK AND WILCOX COMPANY. ALL RIGHTS RESERVED.
THIS DRAWING IS THE PROPERTY OF THE BABCOCK AND WILCOX COMPANY (B&W) AND ITS USE IS GOVERNED BY THE TERMS AND CONDITIONS OF THE CONTRACT FOR WHICH IT WAS CREATED. B&W GRANTS A NON-EXCLUSIVE LICENSE TO USE, REPRODUCE AND DISTRIBUTE THIS DRAWING SOLELY FOR THE MAINTENANCE, REPAIR AND OPERATION, AND FOR SOLICITING BIDS FOR THE ERECTION OF, THE EQUIPMENT DISCLOSED HEREIN.

GENERAL ARRANGEMENT
RECIRCULATION PUMP SYSTEM
SGC 1
UNIT 1

CITY OF HASTINGS
WHELAN ENERGY CENTER
BOTTOM ASH CONVEYOR SYSTEM MODIFICAITON
UNIT 1
HASTINGS, NEBRASKA
CUST. DWG.

SCALE 3/4"=1'-0"
CONTRACT 225361-01
DWG 225361-01-E701-02
REV C

225361-01-E703-01

INSTRUMENT IDENTIFICATION CODE

AT –	ANALYSIS TRANSMITTER
CP –	CONTROL PANEL
EA –	ELECTRONIC ALARM (HORNS & BEACONS)
FE –	FLOW RATE SENSOR
FG –	FLOW INDICATOR (LOCAL)
FI –	FLOW INDICATOR
FIS –	FLOW INDICATING SWITCH
FIT –	FLOW INDICATING TRANSMITTER
FS –	FLOW SWITCH
FT –	FLOW TRANSMITTER
FCV –	FLOW CONTROL VALVE
FXH –	FLEXIBLE HOSE
HS –	HAND SWITCH
HV –	HAND VALVE
IT –	CURRENT TRANSMITTER
KC –	TIME CONTROLLER
LCV –	LEVEL CONTROL VALVE
LI –	LEVEL INDICATOR
LIS –	LEVEL INDICATING SWITCH
LIT –	LEVEL INDICATING TRANSMITTER
LS –	LEVEL SWITCH
LT –	LEVEL TRANSMITTER
PB –	PUSH BUTTON
PDI –	PRESSURE DIFFERENTIAL INDICATOR
PDIS –	PRESSURE DIFFERENTIAL INDICATING SWITCH
PDS –	PRESSURE DIFFERENTIAL SWITCH
PDT –	PRESSURE DIFFERENTIAL TRANSMITTER
PDIT –	PRESSURE DIFFERENTIAL INDICATING TRANSMITTER
PI –	PRESSURE INDICATOR
PIT –	PRESSURE INDICATING TRANSMITTER
PS –	PRESSURE SWITCH
PSV –	PRESSURE SAFETY VALVE
PT –	PRESSURE TRANSMITTER
PCV –	PRESSURE CONTROL VALVE (REGULATOR)
SE –	SPEED ELEMENT (TRANSDUCER)
SIC –	SPEED/CURRENT CONTROLLER
SRV –	PRESSURE SAFETY VALVE (RELIEF)
SS –	SPEED SWITCH
ST –	SPEED TRANSMITTER
SV –	SOLENOID VALVE
TDS –	TEMPERATURE DIFFERENTIAL SWITCH
TE –	TEMPERATURE ELEMENT
TI –	TEMPERATURE INDICATOR
TS –	TEMPERATURE SWITCH
TIT –	TEMPERATURE INDICATING TRANSMITTER
TT –	TEMPERATURE TRANSMITTER
TW –	THERMOWELL
UIC –	MULTIVARIABLE INDICATING CONTROLLER
VE –	VIBRATION ELEMENT (TRANSDUCER) SENSOR TYPE (H,K,V,X,Y,&Z)
VS –	VIBRATION SWITCH
WE –	WEIGHT ELEMENT
WT –	WEIGHT TRANSMITTER
XS –	UNCLASSIFIED SWITCH
XV –	ISOLATION VALVE
YS –	DUST DETECTOR SWITCH
ZI –	POSITION INDICATOR
ZS –	POSITION SWITCH
ZSH –	POSITION SWITCH – OPEN
ZSL –	POSITION SWITCH – CLOSED
ZT –	POSITION TRANSMITTER

CONTROL SIGNAL IDENTIFICATION CODE

AI –	ANALYSIS INDICATOR
CN –	CONVEYOR
CO –	CONTROLLER
DP –	DIFFERENTIAL PRESSURE
DGI –	DIGITAL INPUT
DGO–	DIGITAL OUTPUT
ELC –	EATON LOGIC CONTROLLER
ES –	EMERGENCY STOP
FI –	FLOW INDICATOR
FY –	FLOW CONTROL
GA –	GENERAL ALARM
GC –	CLINKER GRINDER
GW/GWN–	GENERAL WARNING
HT –	HEATER
II –	CURRENT INDICATOR
KY –	TIME RELAY
LA –	LEVEL ALARM
LD –	LOAD STATUS
LI –	LEVEL INDICATOR
MO –	MOTOR
OL –	OVERLOAD
PDA –	PRESSURE DIFFERENTIAL ALARM
PDI –	PRESSURE DIFFERENTIAL INDICATOR
RDY –	READY
RG –	RUNNING
RM –	REMOTE MODE
RN –	RUN COMMAND
RPI –	REMOTE POWER INDICATION
SA –	SPEED ALARM
SI –	SPEED INDICATOR
SK –	SKID
SP –	STOPPED
SPAL –	SHEAR PIN ALARM
SY –	SPEED CONTROL
T –	TRIP COMMAND
TA–	TEMPERATURE ALARM
TI –	TERMPERATURE INDICATOR
TQI –	TORQUE INDICATOR
TT –	TEMPERATURE TRANSMITTER
UA –	MULTIVARIABLE ALARM
VA –	VIBRATION ALARM
VI –	VIBRATION INDICATOR
WI –	WEIGHT INDICATOR
XA –	UNCLASSIFIED ALARM
XVC –	SOLENOID VALVE CLOSED
XVO–	SOLENOID VALVE OPEN
YA –	DUST DETECTOR ALARM
YI –	STATE INDICATOR
ZI –	POSITION INDICATOR
ZIC –	POSITION INDICATOR CLOSED
ZIO –	POSITION INDICATOR OPEN
ZY –	POSITION CONTROL

NOTES

1. EACH EQUIPMENT ITEM IN A SYSTEM IS ASSIGNED A 3 OR 4 DIGIT B&W TAG NUMBER. THE TAGS ARE SHOWN NEXT TO THE ASSOCIATED EQUIPMENT IN PARENTHESIS. EXAMPLE (015)
2. ALL AUTOMATED VALVES ARE NORMALLY CLOSED IN THE DE–ENERGIZED STATE UNLESS SPECIFICALLY NOTED ON THE DRAWING AS NORMALLY OPEN (N.O.).
3. ALL MANUALLY OPERATED VALVES ARE NORMALLY OPEN UNLESS SPECIFICALLY NOTED ON THE DRAWING AS NORMALLY CLOSED (N.C.).
4. ALL INSTRUMENT & PLANT AIR PIPING IS NOT FURNISHED BY B&W UNLESS NOTED OTHERWISE ON THE DRAWING.
5. ALL INSTRUMENT AIR TUBING IS 3/8"Φ (10mm) MINIMUM UNLESS NOTED OTHERWISE ON THE DRAWING.
6. ALL EQUIPMENT IS DESIGNED FOR INSTRUMENT QUALITY AIR WITH A PRESSURE RANGE OF 80–120 PSIG (5.6–8.4 Kg/CM^2) UNLESS NOTED OTHERWISE ON THE DRAWING.
7. (F) DENOTES "FURNISHED BY B&W". (NF) DENOTES "NOT FURNISHED BY B&W". (E) DENOTES "EXISTING".
8. P&ID's ARE SCHEMATICS AND ARE NOT INTENDED TO BE USED AS CONSTRUCTION DRAWINGS.
9. ALL AUTOMATED VALVES ARE FAIL CLOSED AT LOSS OF SIGNAL AND FAIL AT LAST POSITION DURING LOSS OF AIR, UNLESS NOTED OTHERWISE ON THE DRAWING.

INSTRUMENTS

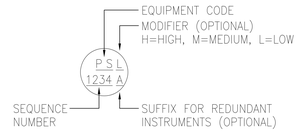

INSTRUMENT SYMBOLS

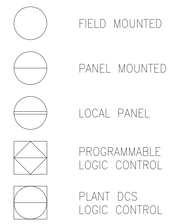

VALVES

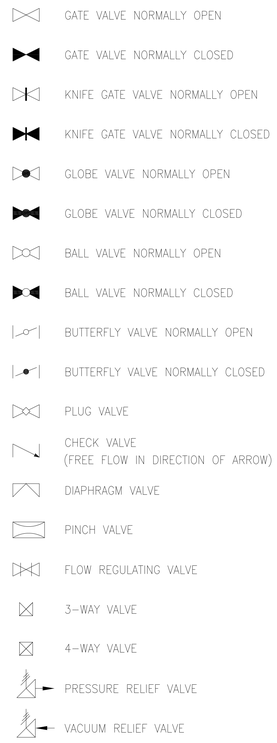

ACTUATORS

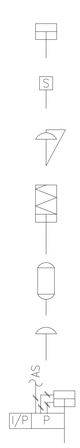

EQUIPMENT

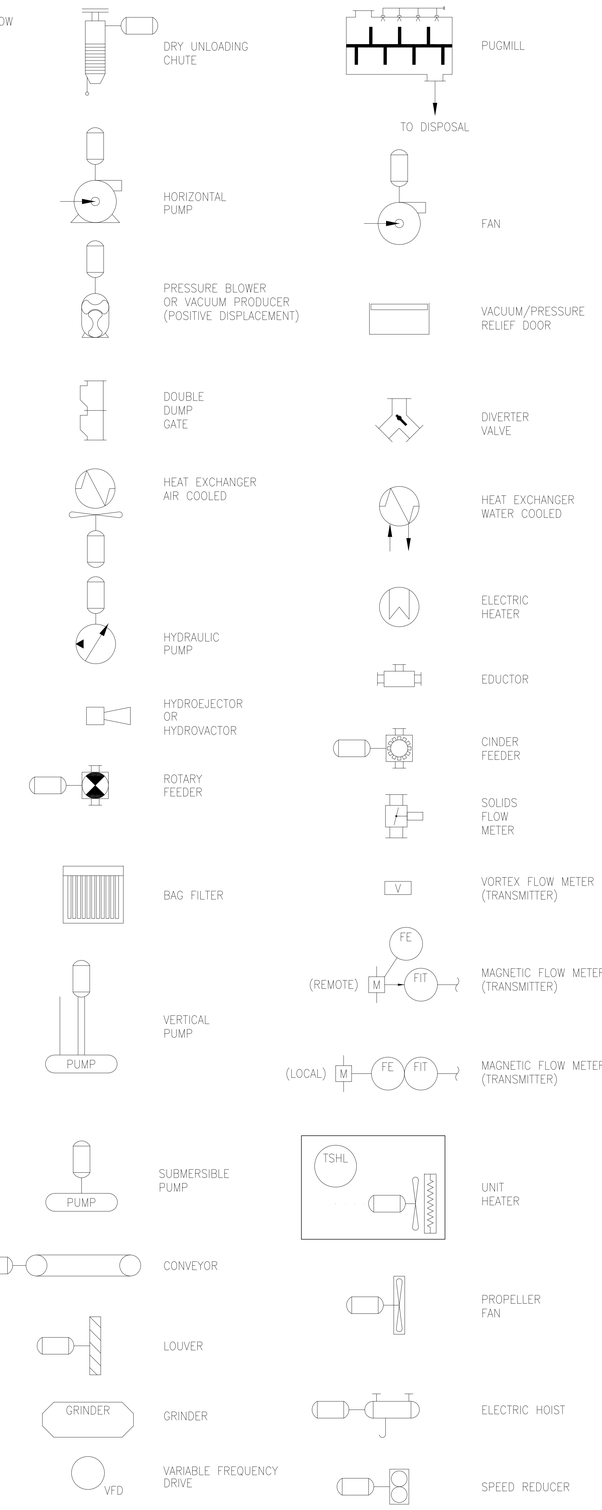

PIPING SPECIALTIES

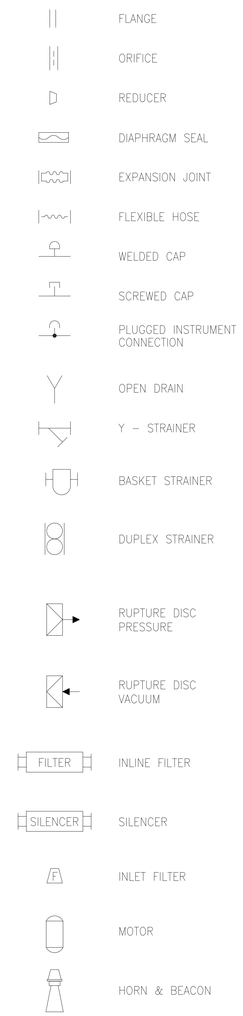

LINE LEGEND

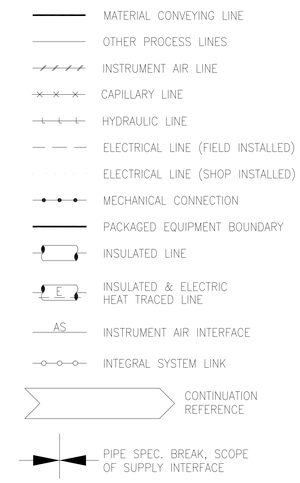

MATERIAL ABBREVIATIONS

ASH–	ASHCOLITE (CHROME IRON ALLOY)
CS–	CARBON STEEL
SS–	STAINLESS STEEL

MECHANICAL IDENTIFICATION CODES

BN–	BIN
CD–	GEAR BOX OR CONTROL DRIVE
CNV–	SUBMERGED GRIND CONVEYOR
EJ–	EXPANSION JOINT
FG–	FLOW GAUGE
FLT–	FILTER/STRAINER
GAT–	SLUICE GATE
GRN–	CLINKER–GRINDER
HOP–	BUNKER OR HOPPER
HPU–	HYDRAULIC DRIVE
HT–	ELECTRIC HEATER
JET–	EJECTOR
MO–	ELECTRIC MOTOR
MX–	MIXER
PU–	PUMP
VFD–	VARIABLE FREQUENCY DRIVE
TNK–	TANK

SYSTEM CODES

ASA–	BOTTOM ASH HANDLING
ASB–	FLY ASH HANDLING
CAA–	STATION AIR
HRA–	CIRCULATING WATER
WSA–	SERVICE WATER

REVISIONS

REV.	DATE	REV. BY	CKD. BY	ENG. APP.	ENG. APP.	REVISION RECORD
A	9/30/25	ATL	RJK			INITIAL ISSUE

DRAWN BY	ATL	3/17/23
CHECKED BY	RJK	9/30/25
MECH. APP.		
STRUCT. APP.		
ELECT. APP.		

Allen-Sherman-Hoff
The Babcock & Wilcox Company
Exton, Pennsylvania, U.S.A.

©2023 THE BABCOCK AND WILCOX COMPANY ALL RIGHTS RESERVED.
THIS DRAWING IS THE PROPERTY OF THE BABCOCK AND WILCOX COMPANY (B&W) AND ITS USE IS GOVERNED BY THE TERMS AND CONDITIONS OF THE CONTRACT FOR WHICH IT WAS CREATED. B&W GRANTS A NON–EXCLUSIVE LICENSE TO USE, REPRODUCE AND DISTRIBUTE THIS DRAWING SOLELY FOR THE MAINTENANCE, REPAIR AND OPERATION, AND FOR SOLICITING BIDS FOR THE ERECTION OF, THE EQUIPMENT DISCLOSED HEREIN.

PROCESS AND INSTRUMENTATION DIAGRAM
BOTTOM ASH
RECIRCULATION SYSTEM

CITY OF HASTINGS
WHELAN ENERGY CENTER
BOTTOM ASH CONVEYOR SYSTEM MODIFICATION
UNIT 1
HASTINGS, NEBRASKA

SCALE NONE
CONTRACT 225361–01
DWG 225361–01–E703–01
REV A

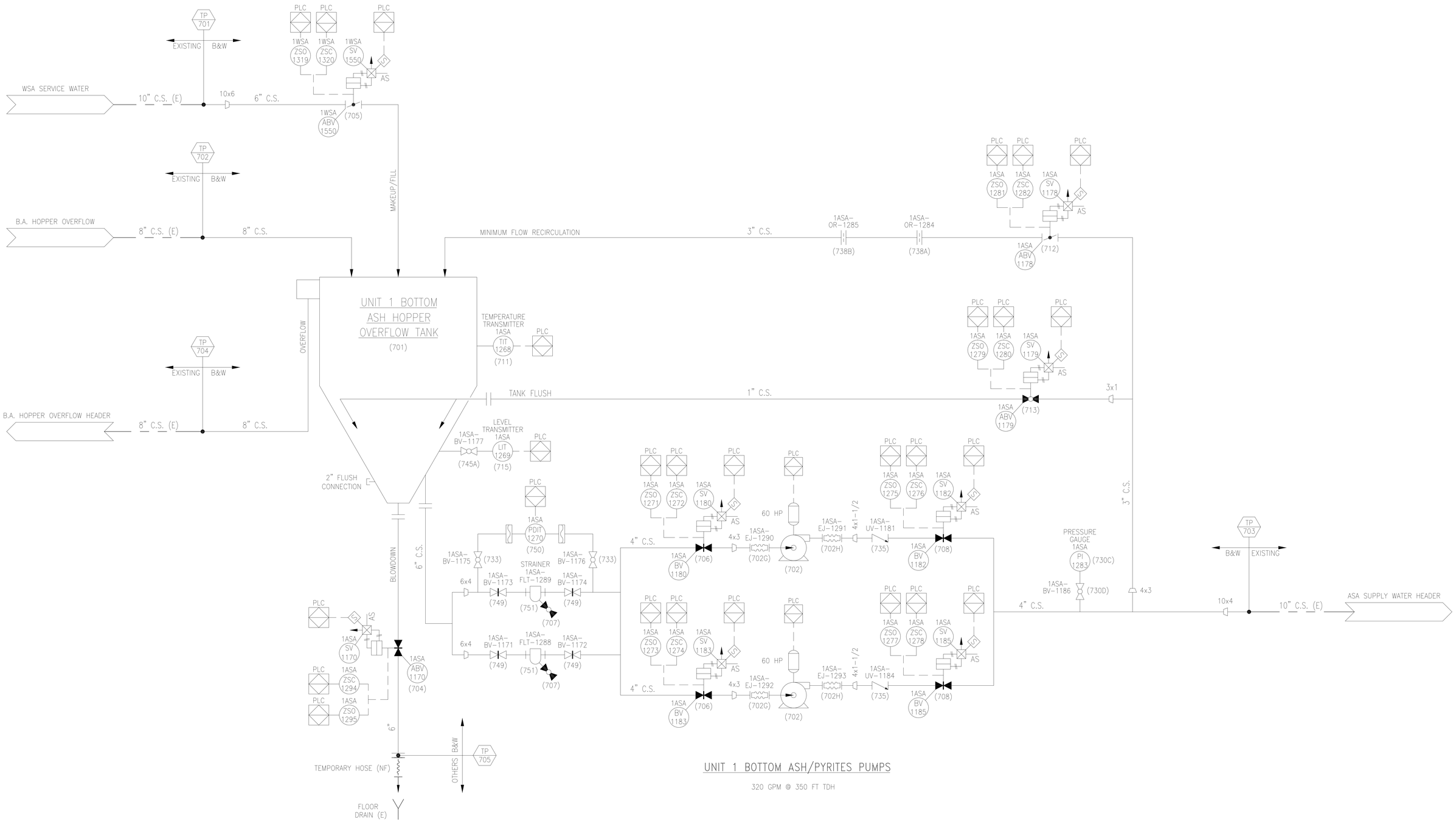

UNIT 1 BOTTOM ASH/PYRITES PUMPS

320 GPM @ 350 FT TDH

NOTES

1. ALL AUTOMATED VALVES ARE NORMALLY CLOSED IN THE DE-ENERGIZED STATE UNLESS SPECIFICALLY NOTED ON THE DRAWING AS NORMALLY OPEN (N.O.).
2. ALL AUTOMATED VALVES ARE FAIL CLOSED AT LOSS OF SIGNAL AND FAIL AT LAST POSITION DURING LOSS OF AIR, UNLESS NOTED OTHERWISE ON THE DRAWING.

REVISIONS

REV.	DATE	REV. BY	CKD. BY	ENG. APP.	ENG. APP.	REVISION RECORD
D	12/10/25	RJK				TAGGING REVISIONS
C	11/19/25	RJK	JT			CORRECTED PUMP ARRANGEMENT
B	11/7/25	RJK	JT			REVISED PER CUSTOMER COMMENTS
A	9/30/25	ATL	RJK			INITIAL ISSUE

DRAWN BY	ATL	3/17/23
CHECKED BY	RJK	9/30/25
MECH. APP.		
STRUCT. APP.		
ELECT. APP.		

Allen-Sherman-Hoff
The Babcock & Wilcox Company
Exton, Pennsylvania, U.S.A.

©2023 THE BABCOCK AND WILCOX COMPANY ALL RIGHTS RESERVED.
THIS DRAWING IS THE PROPERTY OF THE BABCOCK AND WILCOX COMPANY (B&W) AND ITS USE IS GOVERNED BY THE TERMS AND CONDITIONS OF THE CONTRACT FOR WHICH IT WAS CREATED. B&W GRANTS A NON-EXCLUSIVE LICENSE TO USE, REPRODUCE AND DISTRIBUTE THIS DRAWING SOLELY FOR THE MAINTENANCE, REPAIR AND OPERATION, AND FOR SOLICITING BIDS FOR THE ERECTION OF, THE EQUIPMENT DISCLOSED HEREIN.

PROCESS AND INSTRUMENTATION DIAGRAM
BOTTOM ASH
RECIRCULATION SYSTEM

CITY OF HASTINGS
WHELAN ENERGY CENTER
BOTTOM ASH CONVEYOR SYSTEM MODIFICATION
UNIT 1
HASTINGS, NEBRASKA

SCALE NONE
CONTRACT 225361-01
DWG 225361-01-E703-02
REV D

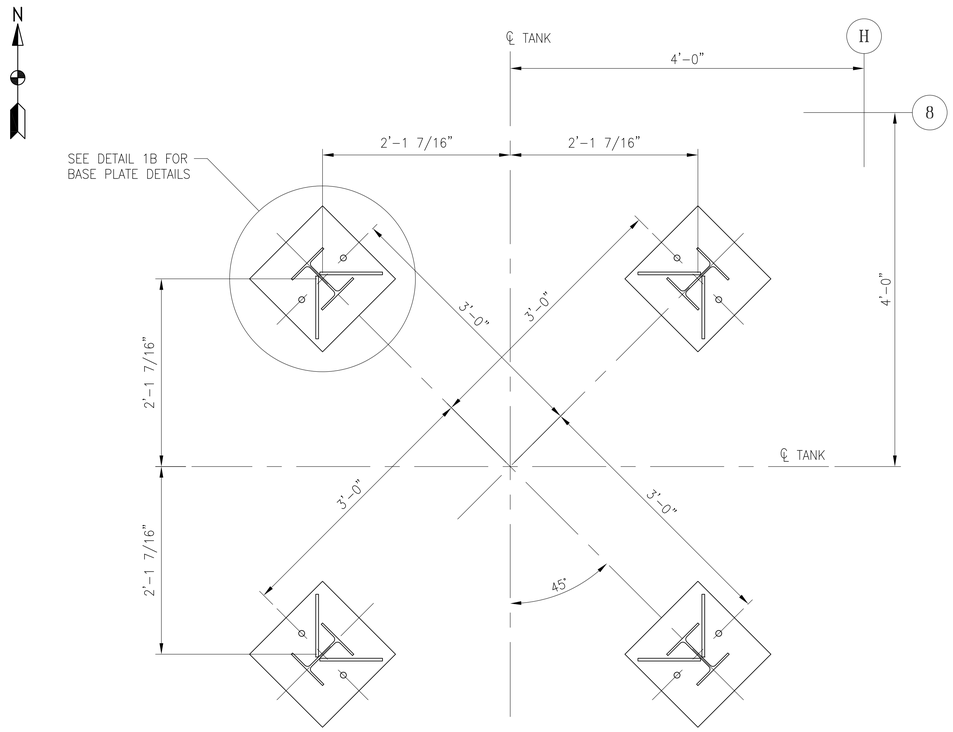

DETAIL 1A / BASE PLATE PLAN –01

FOUNDATION LOADING TABLE				
LOADING (ALL LOADS IN KIPS)			TOTAL	PER COLUMN
VERTICAL	DEAD LOAD (DL)		4.6	1.2
VERTICAL	CONTENTS MAX OPERATING		24.7	6.4
VERTICAL	LIVE LOAD (LL)		0.0	0.0
VERTICAL	VERTICAL SEISMIC EFFECT		0.5	0.1
VERTICAL	HORIZONTAL SEISMIC EFFECT		———	±2.2
HORIZ	SEISMIC SHEAR	RADIAL	1.1	0.3
HORIZ	SEISMIC SHEAR	TANGENTIAL	1.1	0.3

VERTICAL (+): DOWNWARD
VERTICAL (–): UPWARD
HORIZONTAL (±): ACTS IN BOTH DIRECTIONS

GENERAL NOTES

1. DESIGN LIVE LOADS:
   A. PLATFORM LL = N/A
2. STRUCTURAL DENSITY OF CONTENTS = 80 PCF.
   STRUCTURAL DENSITY OF SATURATED CONTENTS = 120 PCF.
3. ALL EXISTING CONCRETE SHALL HAVE A MINIMUM COMPRESSIVE STRENGTH OF 4000 PSI AT 28 DAYS.
   ALL NEW CONCRETE SHALL HAVE A MINIMUM COMPRESSIVE STRENGTH OF 4500 PSI AT 28 DAYS.
4. REINFORCEMENT OF PIER/FDN MUST BE DESIGNED BY CUSTOMER TO DEVELOP FORCES INDICATED ON TABLE.
5. LEGEND:
   (F) DENOTES FURNISHED BY A–S–H.
   (NF) DENOTES NOT FURNISHED BY A–S–H.
   (FE) DENOTES FURNISHED BY ERECTOR.
6. ALL MATERIAL ON THIS DRAWING IS (F) UNLESS NOTED OTHERWISE.

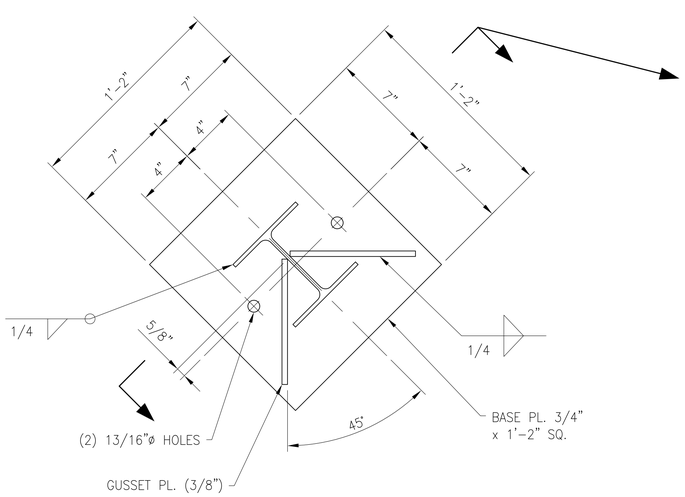

DETAIL 1B / BASE PLATE (TYP. 4 PLACES) –01

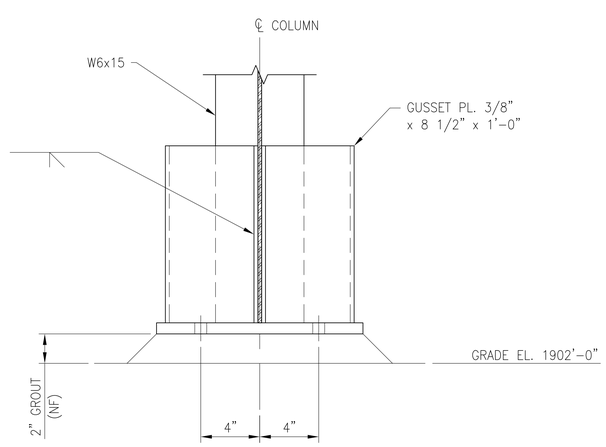

REV.	DATE	REV. BY	CKD. BY	ENG. APP.	ENG. APP.	REVISION RECORD
A	10/24/25	KBJ				INITIAL ISSUE

REVISIONS

DRAWN BY	KBJ	10/24/25
CHECKED BY		
MECH. APP.		
STRUCT. APP.	KBJ	10/24/25
ELECT. APP.		

Allen-Sherman-Hoff
The Babcock & Wilcox Company
Exton, Pennsylvania, U.S.A.

©2023 THE BABCOCK AND WILCOX COMPANY ALL RIGHTS RESERVED.
THIS DRAWING IS THE PROPERTY OF THE BABCOCK AND WILCOX COMPANY (B&W) AND ITS USE IS GOVERNED BY THE TERMS AND CONDITIONS OF THE CONTRACT FOR WHICH IT WAS CREATED. B&W GRANTS A NON-EXCLUSIVE LICENSE TO USE, REPRODUCE AND DISTRIBUTE THIS DRAWING SOLELY FOR THE MAINTENANCE, REPAIR AND OPERATION, AND FOR SOLICITING BIDS FOR THE ERECTION OF, THE EQUIPMENT DISCLOSED HEREIN.

FOUNDATION PLAN
BOTTOM ASH HOPPER
OVERFLOW TANK
UNIT 1

CITY OF HASTINGS
WHELAN ENERGY CENTER
B.A. WATER RECIRCULATION SYSTEM
UNIT 1
HASTINGS, NEBRASKA

SCALE
CONTRACT 225361–01
DWG 225361–01–E705–01
REV A

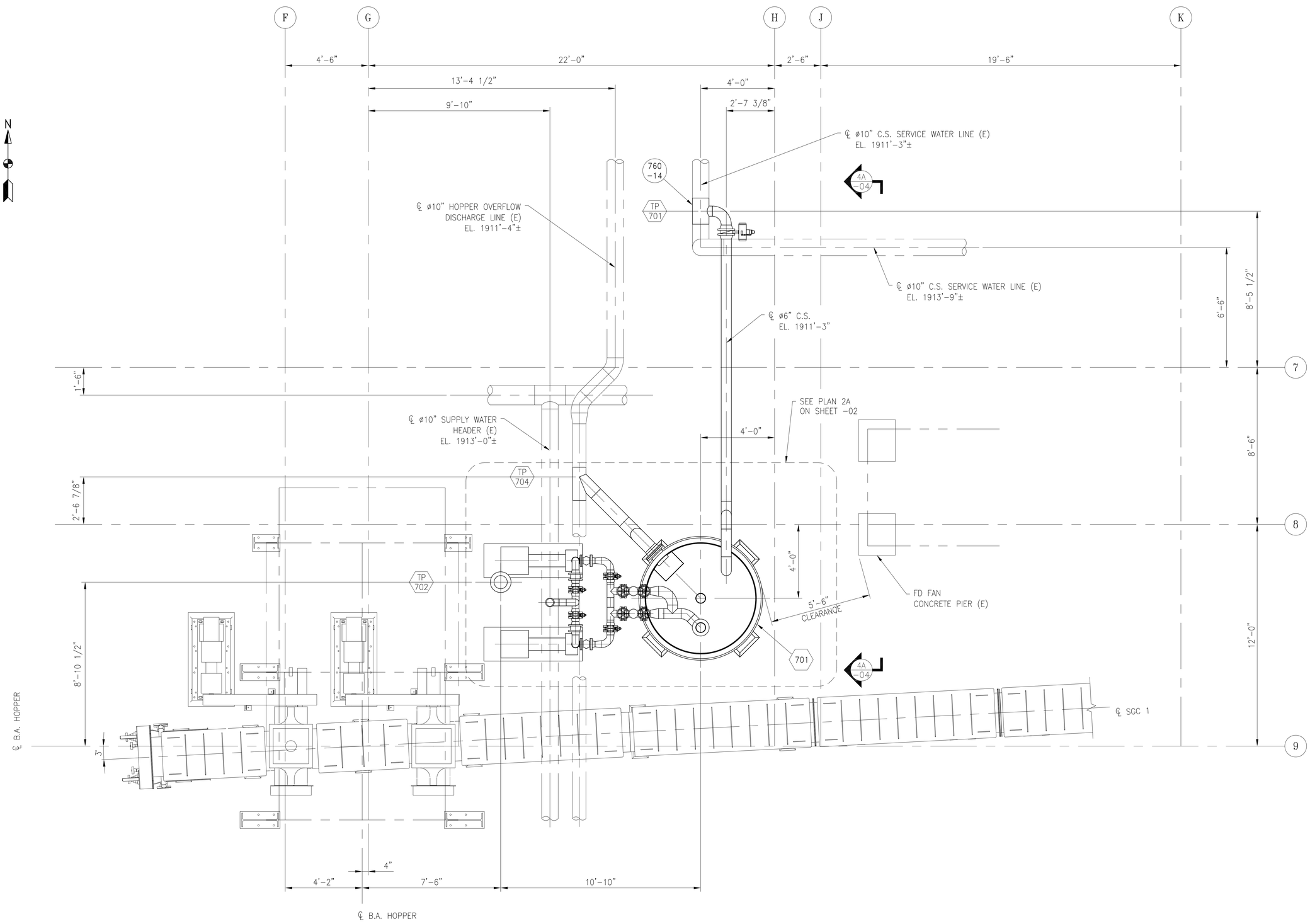

PLAN 1A -01

REV.	DATE	REV. BY	CKD. BY	ENG. APP.	ENG. APP.	REVISION RECORD
B	11/26/26	JT	RJK	RJK		GENERAL REVISION
A	10/31/25	JT	RJK	RJK		INITIAL ISSUE

REVISIONS

DRAWN BY	JT	10/31/25
CHECKED BY	RJK	10/31/25
MECH. APP.	RJK	10/31/25
STRUCT. APP.		
ELECT. APP.		

Allen-Sherman-Hoff
The Babcock & Wilcox Company
Exton, Pennsylvania, U.S.A.

©2023 THE BABCOCK AND WILCOX COMPANY ALL RIGHTS RESERVED.
THIS DRAWING IS THE PROPERTY OF THE BABCOCK AND WILCOX COMPANY (B&W) AND ITS USE IS GOVERNED BY THE TERMS AND CONDITIONS OF THE CONTRACT FOR WHICH IT WAS CREATED. B&W GRANTS A NON-EXCLUSIVE LICENSE TO USE, REPRODUCE AND DISTRIBUTE THIS DRAWING SOLELY FOR THE MAINTENANCE, REPAIR AND OPERATION, AND FOR SOLICITING BIDS FOR THE ERECTION OF, THE EQUIPMENT DISCLOSED HEREIN.

ERECTION ARRANGEMENT
RECIRCULATION PUMP SYSTEM
SGC 1
UNIT 1

CITY OF HASTINGS
WHELAN ENERGY CENTER
BOTTOM ASH CONVEYOR SYSTEM MODIFICAITON
UNIT 1
HASTINGS, NEBRASKA

CUST. DWG.

SCALE 1/2"=1'-0"
CONTRACT 225361-01
DWG 225361-01-E730-01
REV B

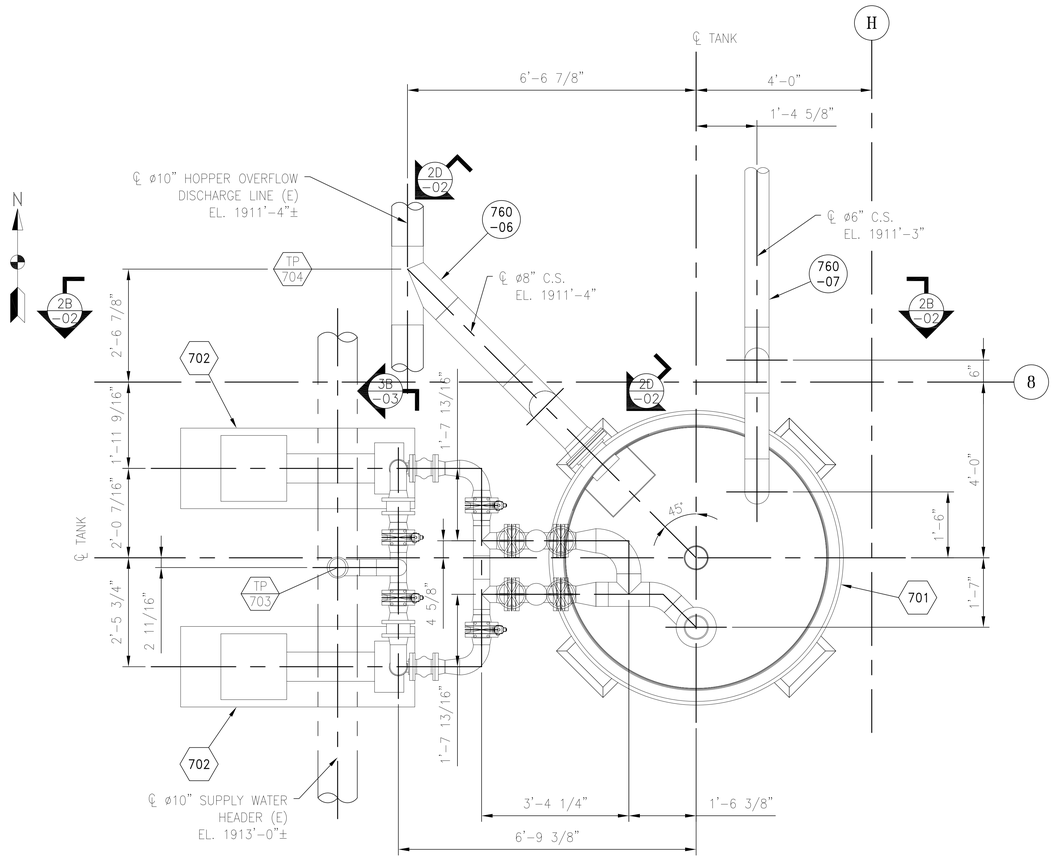

PLAN 2A -01

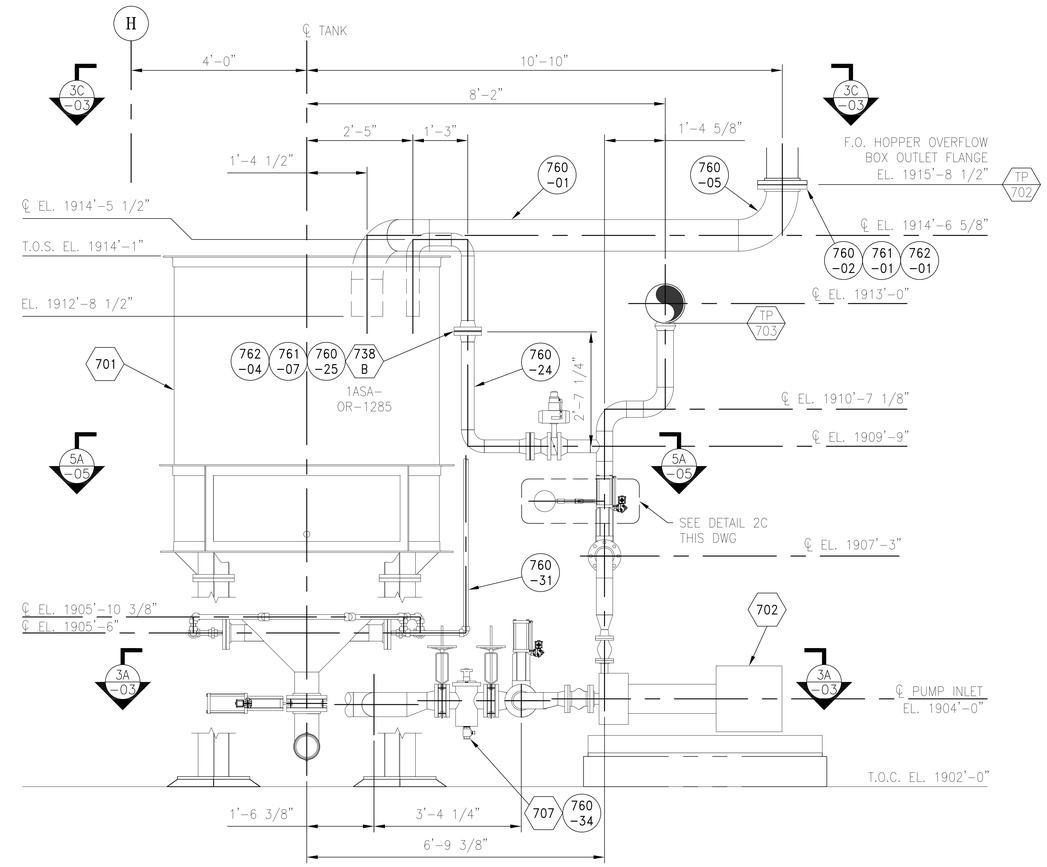

ELEVATION 2B -02
LOOKING SOUTH
OVERFLOW & MAKEUP PIPING NOT SHOWN FOR CLARITY

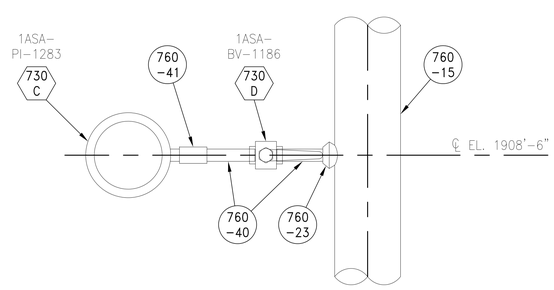

DETAIL 2C -02
SCALE: 3"=1'-0"

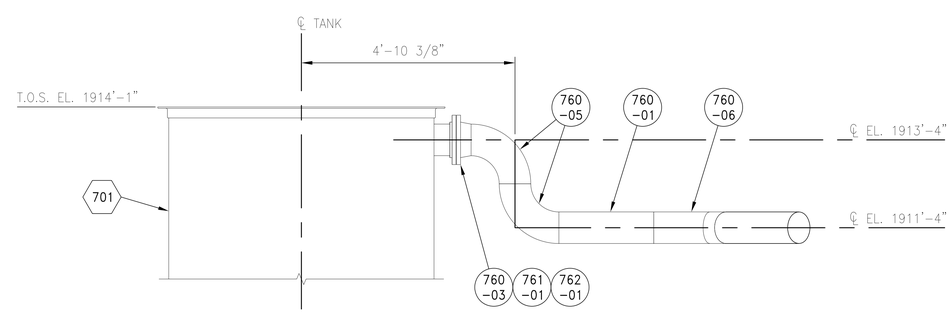

SECTION 2D -02

REVISIONS						
REV.	DATE	REV. BY	CKD. BY	ENG. APP.	ENG. APP.	REVISION RECORD
C	12/10/25	RJK				REVISED PER CUSTOMER COMMENTS
B	11/26/26	JT	RJK	RJK		GENERAL REVISION
A	10/31/25	JT	RJK	RJK		INITIAL ISSUE

DRAWN BY	JT	10/31/25
CHECKED BY	RJK	10/31/25
MECH. APP.	RJK	10/31/25
STRUCT. APP.		
ELECT. APP.		

Allen-Sherman-Hoff
The Babcock & Wilcox Company
Exton, Pennsylvania, U.S.A.

©2023 THE BABCOCK AND WILCOX COMPANY ALL RIGHTS RESERVED.
THIS DRAWING IS THE PROPERTY OF THE BABCOCK AND WILCOX COMPANY (B&W) AND ITS USE IS GOVERNED BY THE TERMS AND CONDITIONS OF THE CONTRACT FOR WHICH IT WAS CREATED. B&W GRANTS A NON-EXCLUSIVE LICENSE TO USE, REPRODUCE AND DISTRIBUTE THIS DRAWING SOLELY FOR THE MAINTENANCE, REPAIR AND OPERATION, AND FOR SOLICITING BIDS FOR THE ERECTION OF, THE EQUIPMENT DISCLOSED HEREIN.

ERECTION ARRANGEMENT
RECIRCULATION PUMP SYSTEM
SGC 1
UNIT 1

CITY OF HASTINGS
WHELAN ENERGY CENTER
BOTTOM ASH CONVEYOR SYSTEM MODIFICATION
UNIT 1
HASTINGS, NEBRASKA

CUST. DWG.

SCALE 3/4"=1'-0"
CONTRACT 225361-01
DWG 225361-01-E730-02
REV C

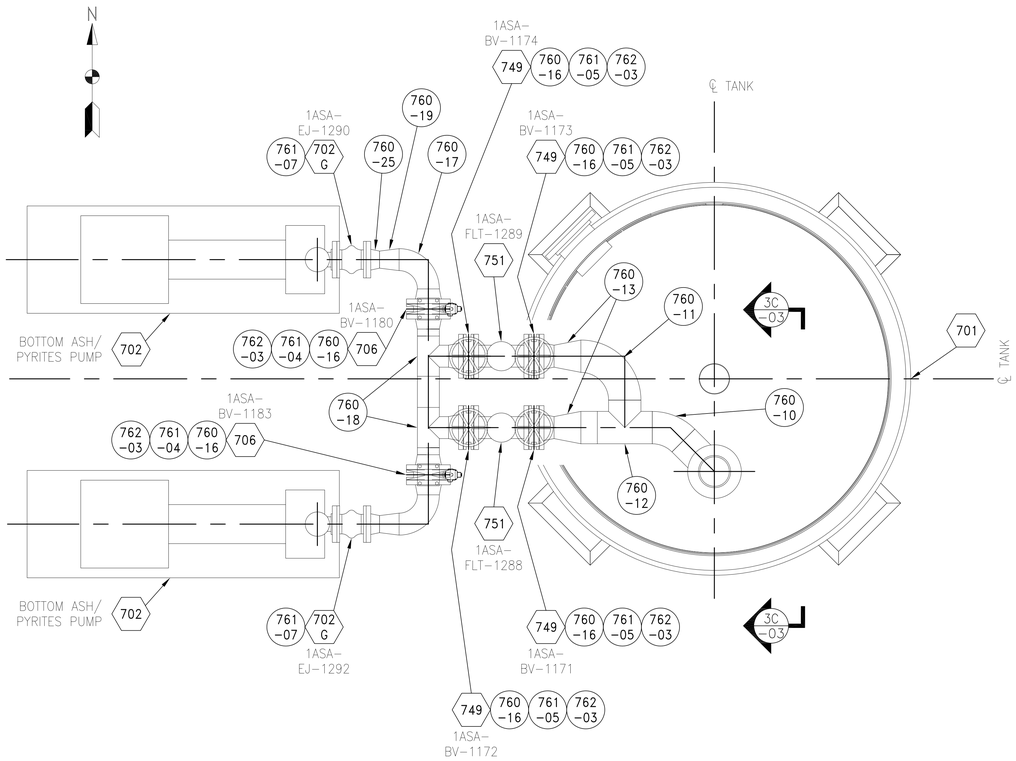

SECTION 3A -02

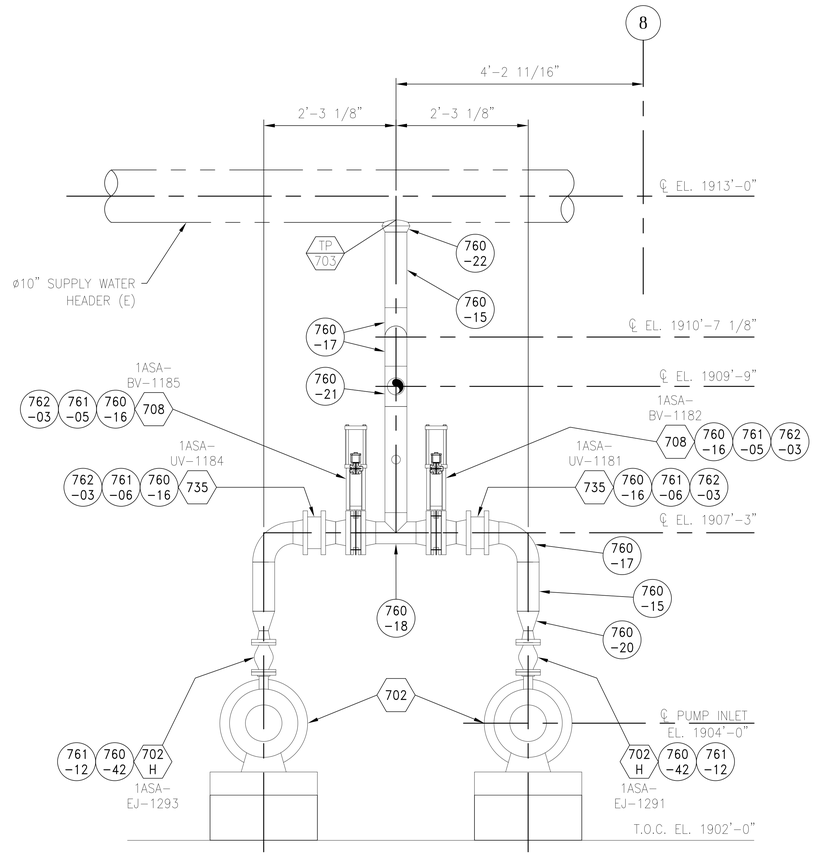

SECTION 3B LOOKING WEST -02

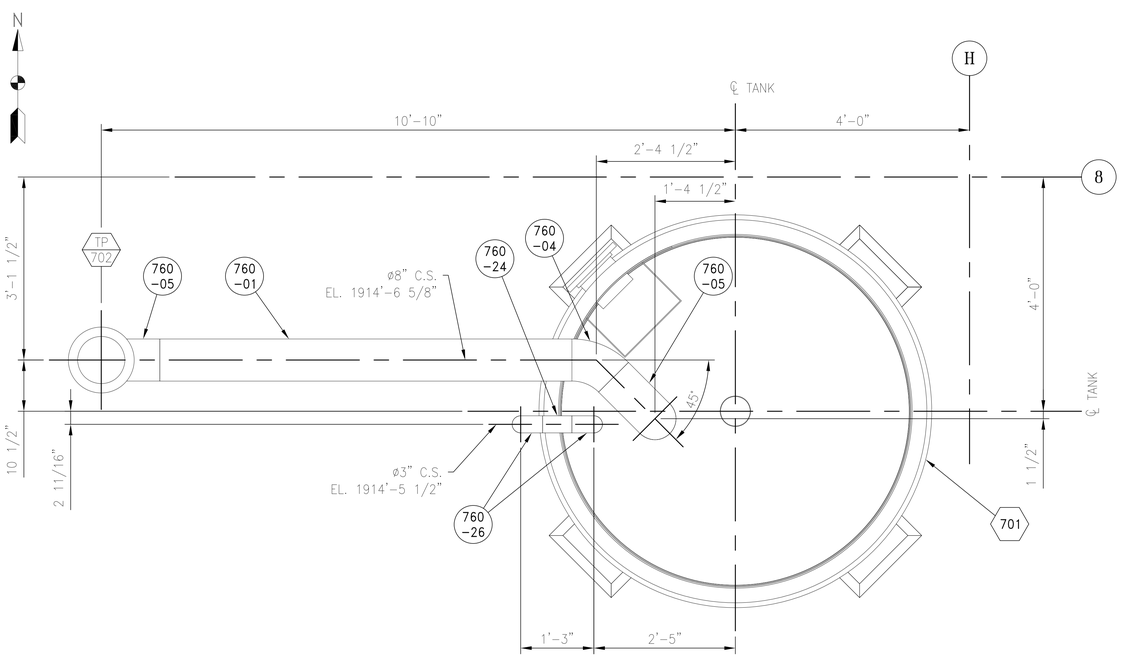

SECTION 3C -02

REVISIONS						
C	12/10/25	RJK				REVISED CHECK VALVE TAG NUMBERS
B	11/26/26	JT	RJK	RJK		GENERAL REVISION
A	10/31/25	JT	RJK	RJK		INITIAL ISSUE
REV.	DATE	REV. BY	CKD. BY	ENG. APP.	ENG. APP.	REVISION RECORD

DRAWN BY	JT	10/31/25
CHECKED BY	RJK	10/31/25
MECH. APP.	RJK	10/31/25
STRUCT. APP.		
ELECT. APP.		

Allen-Sherman-Hoff
The Babcock & Wilcox Company
Exton, Pennsylvania, U.S.A.

©2023 THE BABCOCK AND WILCOX COMPANY. ALL RIGHTS RESERVED.
THIS DRAWING IS THE PROPERTY OF THE BABCOCK AND WILCOX COMPANY (B&W) AND ITS USE IS GOVERNED BY THE TERMS AND CONDITIONS OF THE CONTRACT FOR WHICH IT WAS CREATED. B&W GRANTS A NON-EXCLUSIVE LICENSE TO USE, REPRODUCE AND DISTRIBUTE THIS DRAWING SOLELY FOR THE MAINTENANCE, REPAIR AND OPERATION, AND FOR SOLICITING BIDS FOR THE ERECTION OF, THE EQUIPMENT DISCLOSED HEREIN.

ERECTION ARRANGEMENT
RECIRCULATION PUMP SYSTEM
SGC 1
UNIT 1

CITY OF HASTINGS
WHELAN ENERGY CENTER
BOTTOM ASH CONVEYOR SYSTEM MODIFICATION
UNIT 1
HASTINGS, NEBRASKA

CUST. DWG.

SCALE 1"=1'-0"
CONTRACT 225361-01
DWG 225361-01-E730-03
REV C

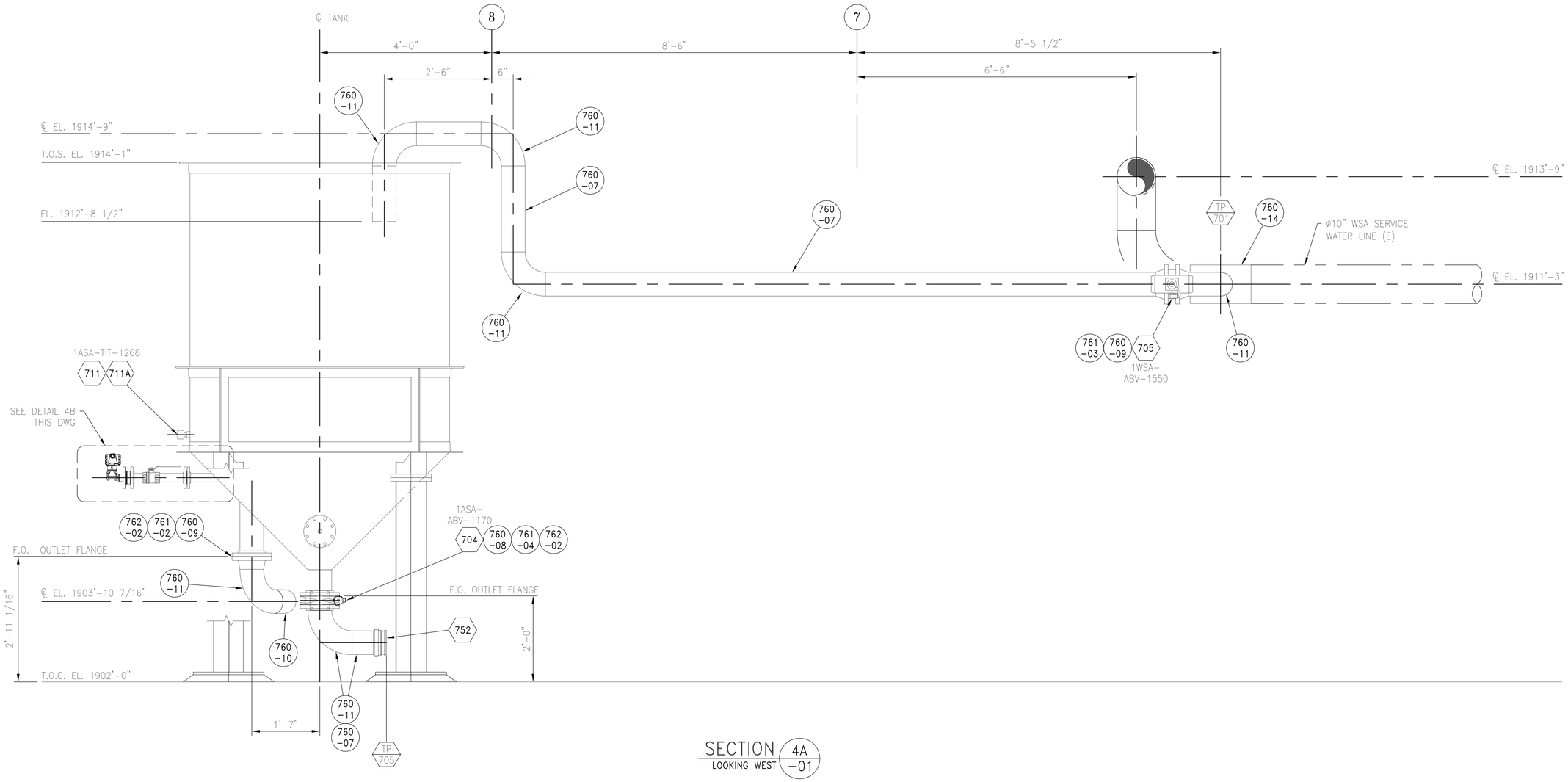

SECTION 4A -01
LOOKING WEST

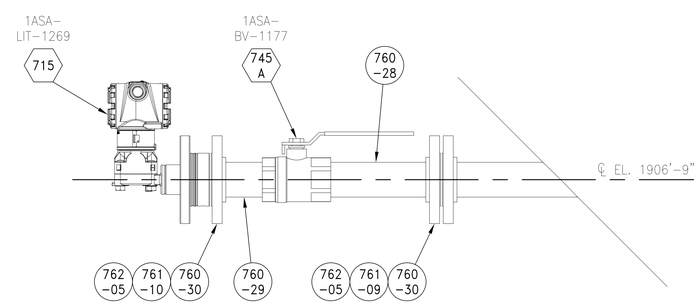

DETAIL 4B -04
SCALE: 3"=1'-0"

REVISIONS						
REV.	DATE	REV. BY	CKD. BY	ENG. APP.	ENG. APP.	REVISION RECORD
C	12/10/25	RJK				REVISED PER CUSTOMER COMMENTS
B	11/26/26	JT	RJK	RJK		GENERAL REVISION
A	10/31/25	JT	RJK	RJK		INITIAL ISSUE

DRAWN BY	JT	10/31/25
CHECKED BY	RJK	10/31/25
MECH. APP.	RJK	10/31/25
STRUCT. APP.		
ELECT. APP.		

Allen-Sherman-Hoff
The Babcock & Wilcox Company
Exton, Pennsylvania, U.S.A.

©2023 THE BABCOCK AND WILCOX COMPANY ALL RIGHTS RESERVED.
THIS DRAWING IS THE PROPERTY OF THE BABCOCK AND WILCOX COMPANY (B&W) AND ITS USE IS GOVERNED BY THE TERMS AND CONDITIONS OF THE CONTRACT FOR WHICH IT WAS CREATED. B&W GRANTS A NON-EXCLUSIVE LICENSE TO USE, REPRODUCE AND DISTRIBUTE THIS DRAWING SOLELY FOR THE MAINTENANCE, REPAIR AND OPERATION, AND FOR SOLICITING BIDS FOR THE ERECTION OF, THE EQUIPMENT DISCLOSED HEREIN.

ERECTION ARRANGEMENT
RECIRCULATION PUMP SYSTEM
SGC 1
UNIT 1

CITY OF HASTINGS
WHELAN ENERGY CENTER
BOTTOM ASH CONVEYOR SYSTEM MODIFICATION
UNIT 1
HASTINGS, NEBRASKA

CUST. DWG.

SCALE 1"=1'-0"
CONTRACT 225361-01
DWG 225361-01-E730-04
REV C

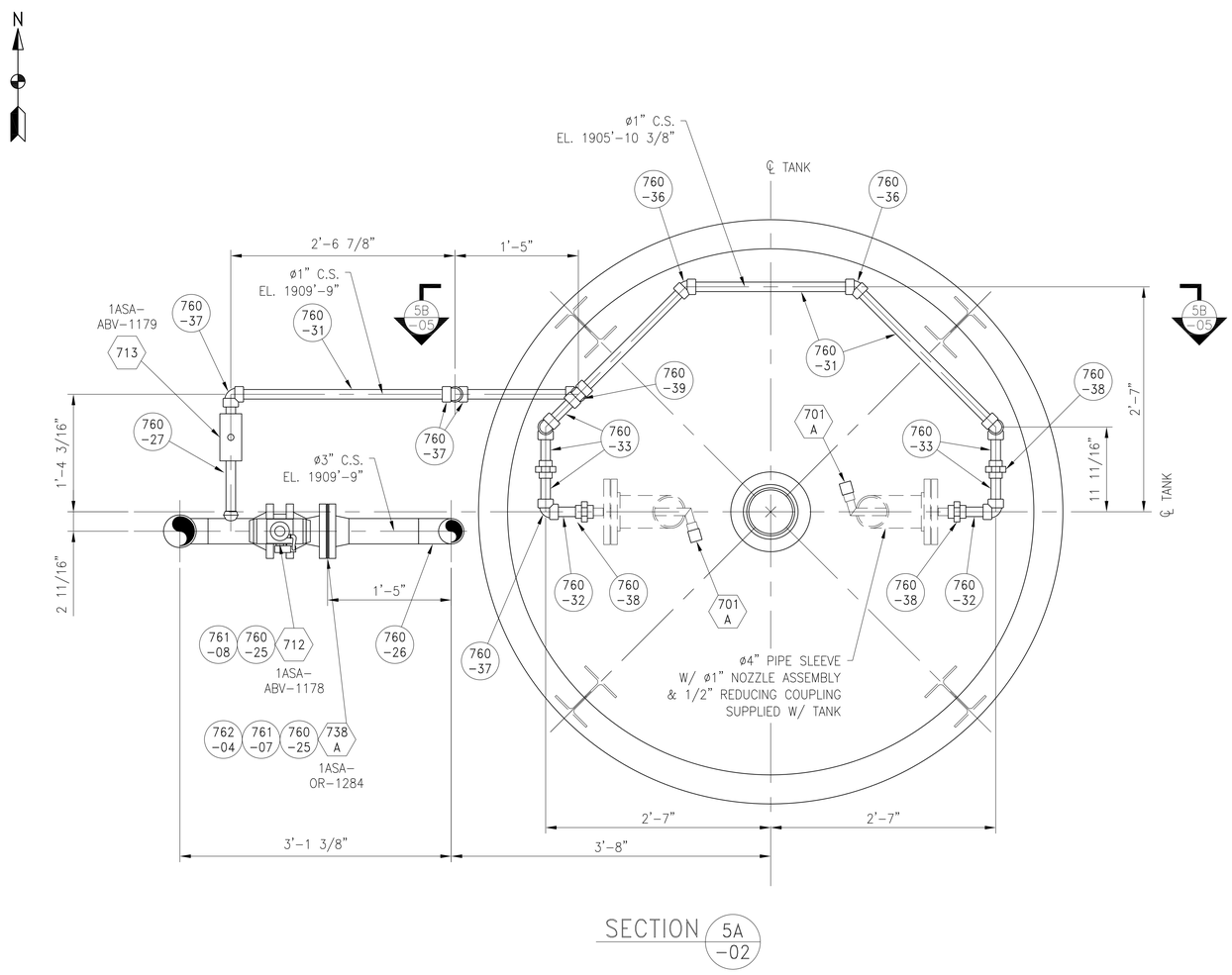

SECTION 5A -02

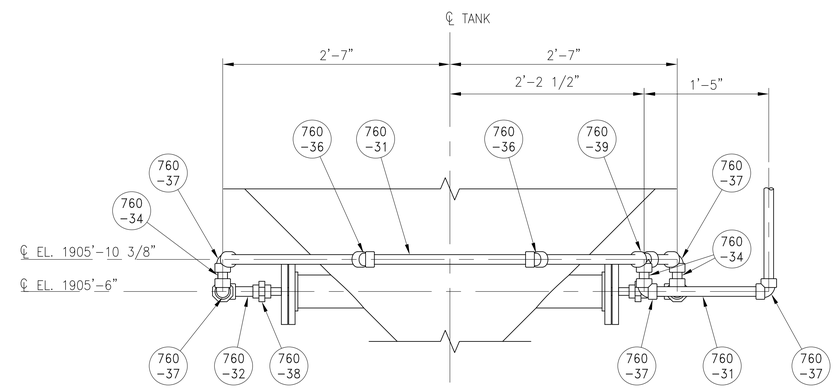

SECTION 5B -05
LOOKING SOUTH

REV.	DATE	REV. BY	CKD. BY	ENG. APP.	ENG. APP.	REVISION RECORD
B	11/26/26	JT	RJK	RJK		GENERAL REVISION
A	10/31/25	JT	RJK	RJK		INITIAL ISSUE

REVISIONS

DRAWN BY	JT	10/31/25
CHECKED BY	RJK	10/31/25
MECH. APP.	RJK	10/31/25
STRUCT. APP.		
ELECT. APP.		

Allen-Sherman-Hoff
The Babcock & Wilcox Company
Exton, Pennsylvania, U.S.A.

©2023 THE BABCOCK AND WILCOX COMPANY ALL RIGHTS RESERVED.
THIS DRAWING IS THE PROPERTY OF THE BABCOCK AND WILCOX COMPANY (B&W) AND ITS USE IS GOVERNED BY THE TERMS AND CONDITIONS OF THE CONTRACT FOR WHICH IT WAS CREATED. B&W GRANTS A NON-EXCLUSIVE LICENSE TO USE, REPRODUCE AND DISTRIBUTE THIS DRAWING SOLELY FOR THE MAINTENANCE, REPAIR AND OPERATION, AND FOR SOLICITING BIDS FOR THE ERECTION OF, THE EQUIPMENT DISCLOSED HEREIN.

ERECTION ARRANGEMENT
RECIRCULATION PUMP SYSTEM
SGC 1
UNIT 1

CITY OF HASTINGS
WHELAN ENERGY CENTER
BOTTOM ASH CONVEYOR SYSTEM MODIFICAITON
UNIT 1
HASTINGS, NEBRASKA
CUST. DWG.

SCALE 1 1/2"=1'-0"
CONTRACT 225361-01
DWG 225361-01-E730-05
REV B

225361-01-E730-06

SYMBOLS & ABBREVIATIONS

BW = BUTT WELD
C/O = CONTROL OPERATED
CS = CARBON STEEL
(E) = EXISTING
(F) = FURNISHED BY A-S-H CO.
(FE) = FURNISHED BY ERECTOR
FF = FLAT FACE
FS = FORGED STEEL
HTG = HIGH TEMP GASKET
H/O = HAND OPERATED VALVE
IG = INCLUDES GASKET
IWB = INTEGRAL WEAR BACK
LF = LINEAR FEET
(NF) = FURNISHED BY OTHERS.
RF = RAISED FACE
S = SEAT SIDE OF VALVE
SO = SLIP-ON
SW = SOCKET WELD
TBE = THREADED BOTH ENDS
THD = THREADED
TOE = THREAD ONE END
WN = WELD NECK
◯ = INDICATES PART NUMBERS IN BILL OF MATERIAL
⬡ = INDICATES EQUIPMENT LIST TAG NUMBER

GENERAL NOTES:

1. SMALL BORE PIPE ROUTING IS OF A GENERAL NATURE, CONTRACTOR MAY ALTER ROUTING TO SUIT.
2. FOR PIPE SUPPORT DETAILS AND DIMENSIONS, REFERENCE 225361-01-E790 SERIES.
3. FOR TANK FOUNDATION PLANS, REFERENCE 225361-01-E720 SERIES.
4. FOR PUMP FOUNDATION PLAN, REFERENCE 225361-01-E746 SERIES.

BILL OF MATERIAL — TAG 760 — C.S. PIPE & FITTINGS

PART NO.	QTY	DESCRIPTION
760-01	12 LF	8" PIPE, SCH STD
760-02	1	8"-150# FLANGE, FFSO
760-03	1	8"-150# FLANGE, WNFF
760-04	1	8"x45° LR ELBOW, SCH STD, BW
760-05	4	8"x90° LR ELBOW, SCH STD, BW
760-06	1	8"x45° LATERAL, SCH STD, BW
760-07	24 LF	6" PIPE, SCH STD
760-08	1	6"-150# FLANGE, FFSO
760-09	3	6"-150# FLANGE, WNFF
760-10	1	6"x45° LR ELBOW, SCH STD, BW
760-11	7	6"x90° LR ELBOW, SCH STD, BW
760-12	1	6" TEE, SCH STD, BW
760-13	2	6"x4" ECCENTRIC REDUCER, SCH STD, BW
760-14	1	10"x10"x6" REDUCING TEE, SCH STD, BW
760-15	10 LF	4" PIPE, SCH STD
760-16	16	4"-150# FLANGE, WNFF
760-17	6	4"x90° LR ELBOW, SCH STD, BW
760-18	3	4" TEE, SCH STD, BW
760-19	2	4"x3" ECCENTRIC REDUCER, SCH STD, BW
760-20	2	4"x1 1/2" CONCENTRIC REDUCER, SCH STD, BW
760-21	1	4"x4"x3" REDUCING TEE, SCH STD, BW
760-22	1	10"x4" WELDOLET, SCH STD, BW
760-23	1	4"x1/2" THREDOLET, 3000#
760-24	10 LF	3" PIPE, SCH STD
760-25	8	3"-150# FLANGE, WNFF
760-26	3	3"x90° LR ELBOW, SCH STD, BW
760-27	1	3"x1" THREDOLET, 3000#
760-28	1	2" PIPE NIPPLE x 8" LG, SCH 80, TBE
760-29	1	2" PIPE NIPPLE x 4" LG, SCH 80, TBE
760-30	2	2"-150# RF FLANGE, 3000#, THREADED
760-31	18 LF	1" PIPE, SCH 80
760-32	2	1" PIPE NIPPLE x 3 1/2" LG, SCH 80, TBE
760-33	5	1" PIPE NIPPLE x 4" LG, SCH 80, TBE
760-34	5	1" PIPE NIPPLE x 2" LG, SCH 80, TBE
760-36	2	1"x45° THREADED ELBOW, 3000# FS
760-37	10	1"x90° THREADED ELBOW, 3000# FS
760-38	4	1" THREADED UNION, 3000# FS
760-39	1	1" THREADED TEE, 3000# FS
760-40	2	1/2" PIPE NIPPLE x 4" LG, SCH 80, TBE
760-41	1	1/2" THREADED FULL COUPLING, 300# FS
760-42	2	1 1/2"-150# FLANGE, WNFF

STEEL PIPE B/M NOTES

1. PIPE 2.5" DIA & BELOW TO BE SCH 80, ASTM A106 GR. B, SEAMLESS, RANDOM LENGTH.
2. PIPE 3" DIA AND ABOVE TO BE SCH STD, ASTM A53 GR. B, SEAMLESS, RANDOM LENGTH.
3. PIPE FITTINGS 3" AND ABOVE MATERIAL TO BE ASTM A234 GR. WPB, SEAMLESS, BUTT WELDED.
4. ALL THREADED FITTINGS TO BE 3000# ASTM A105.
5. FITTING DIMENSIONS SHALL CONFORM TO ANSI B16.9 & B16.28 FOR SIZES 3" DIA AND LARGER.
6. FLANGE DIMENSIONS SHALL CONFORM TO ANSI B16.5.
7. ALL CARBON STEEL PIPE SHALL BE CLEANED AND PAINTED IN ACCORDANCE WITH PAINT SPEC 225361-01-PAINT-G.
8. PLASTIC END CAPS OR PLUGS REQUIRED FOR SHIPMENT.
9. ALL ITEMS ARE TO BE TAGGED PRIOR TO SHIPMENT WITH THE PART NUMBER INDICATED IN BOM ABOVE.

EQUIPMENT LIST

TAG NO.	QTY	ITEM NO.	DESCRIPTION	DWG NO.
701	1	SP236575	OVERFLOW TANK	–
701A	2	LATER	FLUSH NOZZLE TIP	–
702	2	SP236547	BOTTOM ASH/PYRITES RECIRCULATION PUMP	–
702G	2	SP236583	3" RUBBER EXPANSION JOINT, PUMP INLET	–
702H	2	SP236584	1 1/2" RUBBER EXPANSION JOINT, PUMP DISCH.	–
704	1	T-KGVBD06CLDAF	6" C/O KNIFEGATE VALVE	D-8101
705	1	BFV06CESF	6" C/O BUTTERFLY VALVE	C-5682
706	2	T-KGVBD04CLDAF	4" C/O KNIFEGATE VALVE	D-8101
707	2	104510	1" H/O BALL VALVE	A-5164
708	2	T-KGVBD04CLDAF	4" C/O KNIFEGATE VALVE	D-8101
711	1	LATER	TEMPERATURE TRANSMITTER	–
711A	1	LATER	THERMOWELL	–
712	1	BFV03CESF	3" C/O BUTTERFLY VALVE	C-5682
713	1	SP236585	1" C/O BALL VALVE	–
715	1	227687	LEVEL TRANSMITTER	–
730C	1	100278-7	PRESSURE GAUGE	4-5026
730D	1	104508	1/2" H/O BALL VALVE	A-5164
733	2	104508	1/2" H/O BALL VALVE	A-5164
735	2	SP236589	4" CHECK VALVE	–
738A	1	16806-0308	ORIFICE PLATE	B-6026
738B	1	16806-0308	ORIFICE PLATE	B-6026
745A	1	104555	2" H/O BALL VALVE	A-5164
749	4	T-KGVBD04H	4" H/O KNIFEGATE VALVE	D-8085
750	1	SP232629	DIFFERENTIAL PRESSURE TRANSMITTER	–
751	2	SP236550	BASKET STRAINER	–
752	1	SP236586	CAMLOCK COUPLER, 6"MNPT, W/ DUST CAP	–
760	1-LOT	SP236590	LOT-C.S. PIPE & FITTINGS	SEE BOM
761	1-LOT	LATER	LOT-HARDWARE	SEE BOM
762	1-LOT	LATER	LOT-GASKETS	SEE BOM

BILL OF MATERIAL — TAG 761 — HARDWARE

PART NO.	QTY	DESCRIPTION
761-01	16	HEX HEAD BOLT 3/4"-10 X 3 1/2" LG W/H. HEX NUT & PLAIN WASHER (8" FLG)
761-02	8	HEX HEAD BOLT 3/4"-10 X 3-1/4" LG W/H. HEX NUT & PLAIN WASHER (6" FLG)
761-03	8	STUD BOLT 3/4"-10 X 6-1/4" LG W/ (2) H. HEX NUT (6" BFV)
761-04	16	STUD BOLT 3/4"-10 X 3-1/4" LG W/H. HEX NUT (6" KGV)
761-05	128	STUD BOLT 5/8"-11 X 2-3/4" LG W/H. HEX NUT (4" KGV)
761-06	16	STUD BOLT 5/8"-11 X 6 1/2" LG W/ (2) H. HEX NUT (4" CHECK VALVE)
761-07	24	HEX HEAD BOLT 5/8"-11 X 3" LG W/H. HEX NUT & PLAIN WASHER (3" FLG)
761-08	4	STUD BOLT 5/8"-11 X 5-1/2" LG W/ (2) H. HEX NUT (3" BFV)
761-09	4	HEX HEAD BOLT 5/8"-11 X 2 3/4" LG W/H. HEX NUT & PLAIN WASHER (2" FLG)
761-10	4	HEX HEAD BOLT 5/8"-11 X 4" LG W/H. HEX NUT & PLAIN WASHER (2" DIAPHRAGM)
761-12	16	HEX HEAD BOLT 1/2"-13 X 2 1/4" LG W/H. HEX NUT & PLAIN WASHER (1 1/2" FLG)

HARDWARE B/M NOTES

1. BOLTS & THREADED ROD SHALL BE ASTM A193 GRADE B7 W/ ZINC PLATING PER ASTM B633.
2. NUTS SHALL BE ASTM A194 GRADE 2H HEAVY HEX W/ ZINC PLATING PER ASTM B633.
3. PLAIN WASHERS TYPE A PER ANSI B27.2 W/ZINC PLATING PER ASTM B633.

BILL OF MATERIAL — TAG 762 — GASKET

PART NO.	QTY	DESCRIPTION
762-01	2	8"-150# FULL FACE TYPE GASKET 1/8" THICK FOR FLAT FACE FLANGE
762-02	3	6"-150# FULL FACE TYPE GASKET 1/8" THICK FOR FLAT FACE FLANGE
762-03	20	4"-150# FULL FACE TYPE GASKET 1/8" THICK FOR FLAT FACE FLANGE
762-04	4	3"-150# FULL FACE TYPE GASKET 1/8" THICK FOR FLAT FACE FLANGE
762-05	2	2"-150# RAISED FACE RING TYPE GASKET 1/8" THICK FOR RAISED FACE FLANGE

GASKET B/M NOTES

1. GASKET MATERIAL SHALL BE RED RUBBER (SBR) OR NEOPRENE.
2. ALL ITEMS ARE TO BE TAGGED PRIOR TO SHIPMENT WITH THE PART NUMBER INDICATED IN BOM ABOVE.

REVISIONS

REV.	DATE	REV. BY	CKD. BY	ENG. APP.	ENG. APP.	REVISION RECORD
C	12/10/25	RJK				EQUIPMENT LIST UPDATES
B	11/26/26	JT	RJK	RJK		GENERAL REVISION
A	10/31/25	JT	RJK	RJK		INITIAL ISSUE

DRAWN BY	JT	10/31/25
CHECKED BY	RJK	10/31/25
MECH. APP.	RJK	10/31/25
STRUCT. APP.		
ELECT. APP.		

Allen-Sherman-Hoff
The Babcock & Wilcox Company
Exton, Pennsylvania, U.S.A.

©2023 THE BABCOCK AND WILCOX COMPANY ALL RIGHTS RESERVED.
THIS DRAWING IS THE PROPERTY OF THE BABCOCK AND WILCOX COMPANY (B&W) AND ITS USE IS GOVERNED BY THE TERMS AND CONDITIONS OF THE CONTRACT FOR WHICH IT WAS CREATED. B&W GRANTS A NON-EXCLUSIVE LICENSE TO USE, REPRODUCE AND DISTRIBUTE THIS DRAWING SOLELY FOR THE MAINTENANCE, REPAIR AND OPERATION, AND FOR SOLICITING BIDS FOR THE ERECTION OF, THE EQUIPMENT DISCLOSED HEREIN.

ERECTION ARRANGEMENT
RECIRCULATION PUMP SYSTEM
SGC 1
UNIT 1

CITY OF HASTINGS
WHELAN ENERGY CENTER
BOTTOM ASH CONVEYOR SYSTEM MODIFICATION
UNIT 1
HASTINGS, NEBRASKA
CUST. DWG.

SCALE NONE
CONTRACT 225361-01
DWG 225361-01-E730-06
REV C

225361-01-E731-01

BILL OF MATERIALS			
TAG	QTY	PART #	DESCRIPTION
731	4	228471	HOPPER NOZZLE
732	4	228470	FLUSHING LANCE
732A	4	TBD	1" FLAT SPRAY NOZZLE
735	1	TBD	LOT – CARNON STEEL PIPE & FITTINGS
736	1	TBD	LOT – HARDWARE
737	1	TBD	LOT – GASKETS
739	1	TBD	C/O BUTTERFLY VALVE

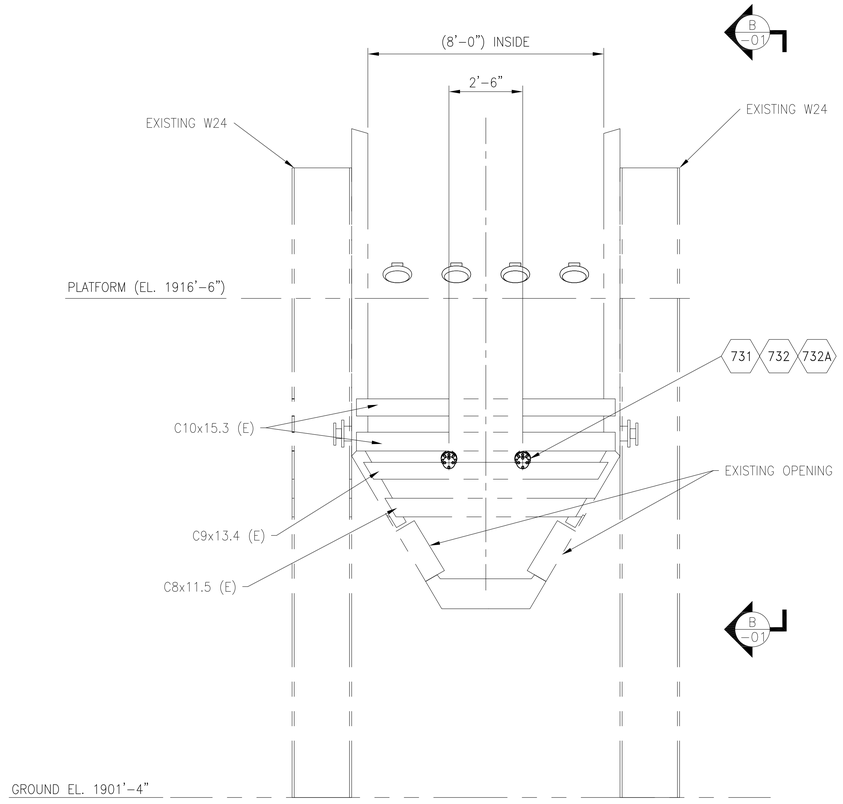

ELEVATION A -01

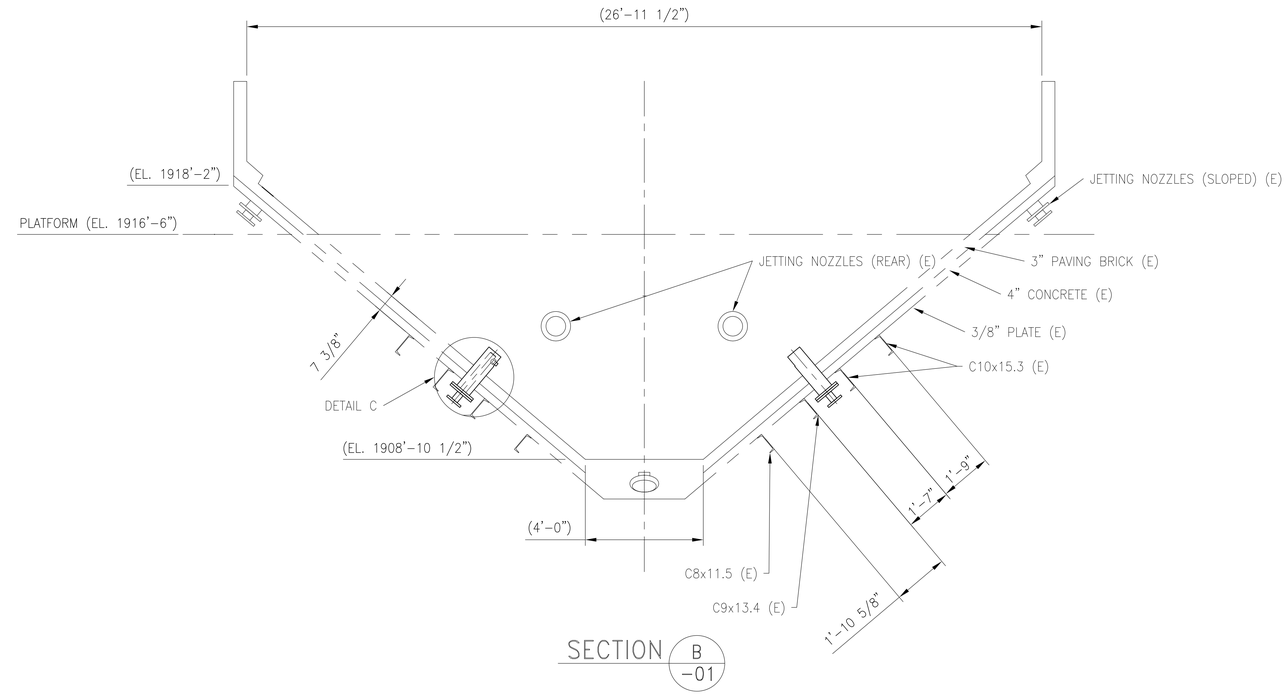

SECTION B -01

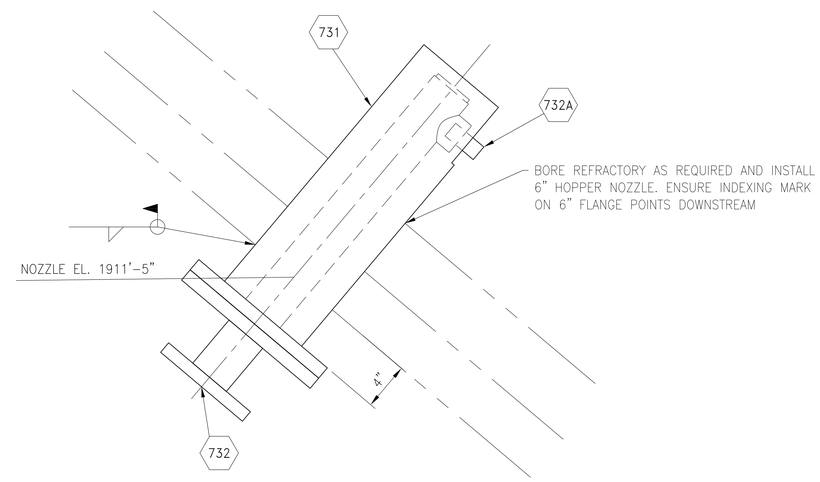

DETAIL C -01

REVISIONS						
REV.	DATE	REV. BY	CKD. BY	ENG. APP.	ENG. APP.	REVISION RECORD
A	01/06/26	JLZ	RJK	RJK		INITIAL ISSUE

DRAWN BY	JLZ	01/07/26
CHECKED BY	RJK	01/07/26
MECH. APP.	RJK	01/07/26
STRUCT. APP.		
ELECT. APP.		

Allen-Sherman-Hoff
The Babcock & Wilcox Company
Exton, Pennsylvania, U.S.A.

©2023 THE BABCOCK AND WILCOX COMPANY ALL RIGHTS RESERVED.
THIS DRAWING IS THE PROPERTY OF THE BABCOCK AND WILCOX COMPANY (B&W) AND ITS USE IS GOVERNED BY THE TERMS AND CONDITIONS OF THE CONTRACT FOR WHICH IT WAS CREATED. B&W GRANTS A NON-EXCLUSIVE LICENSE TO USE, REPRODUCE AND DISTRIBUTE THIS DRAWING SOLELY FOR THE MAINTENANCE, REPAIR AND OPERATION, AND FOR SOLICITING BIDS FOR THE ERECTION OF, THE EQUIPMENT DISCLOSED HEREIN.

HOPPER NOZZLE LOCATIONS

ELEVATIONS AND DETAILS
UNIT 1

CITY OF HASTINGS
WHELAN ENERGY CENTER
B.A. WATER RECIRCULATION SYSTEM
UNIT 1
HASTINGS, NEBRASKA

SCALE 1/2" = 1'-0"
CONTRACT 225361-01
DWG 225361-01-E731-01
REV A

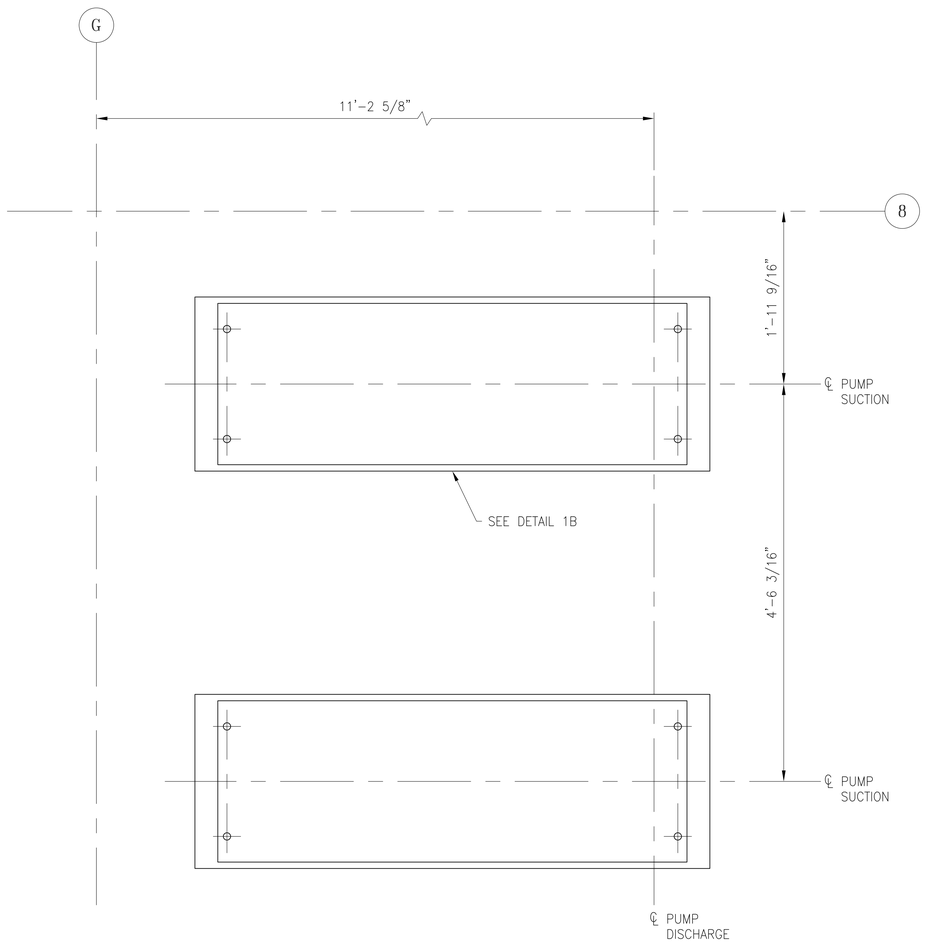

DETAIL 1A -01

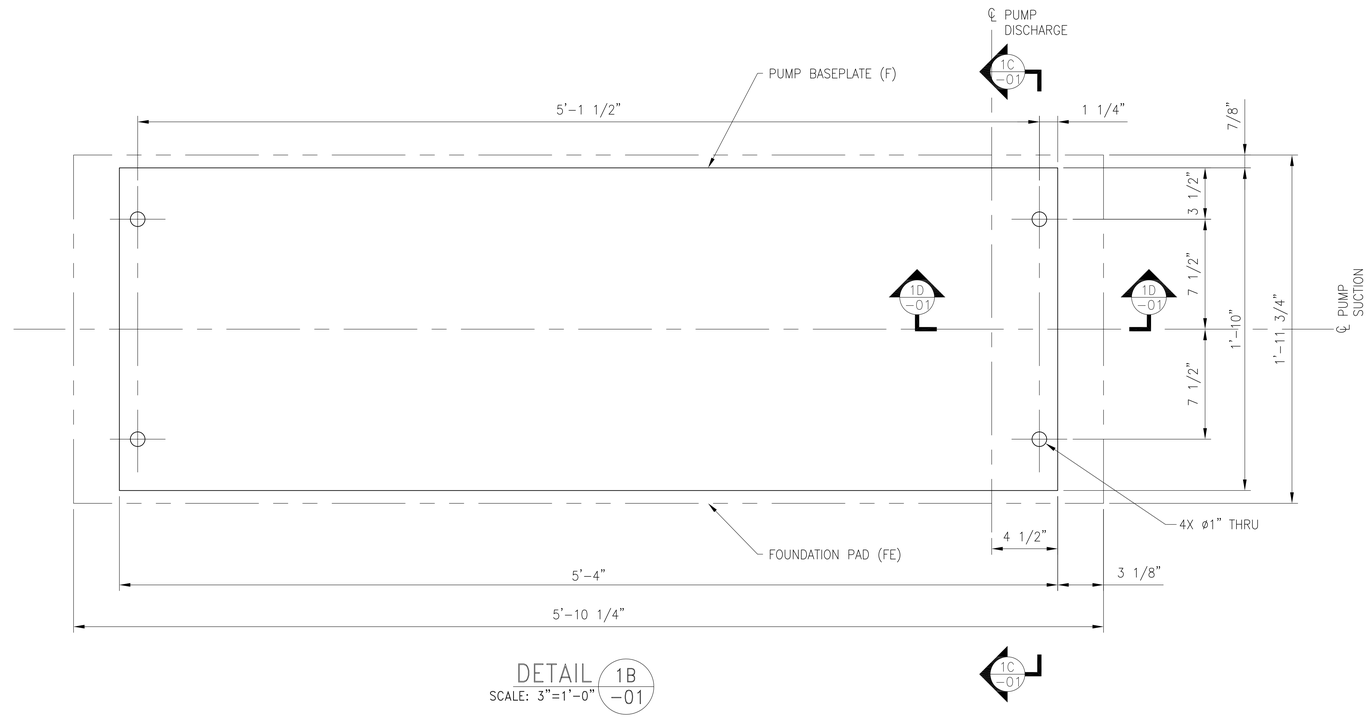

DETAIL 1B -01
SCALE: 3"=1'-0"

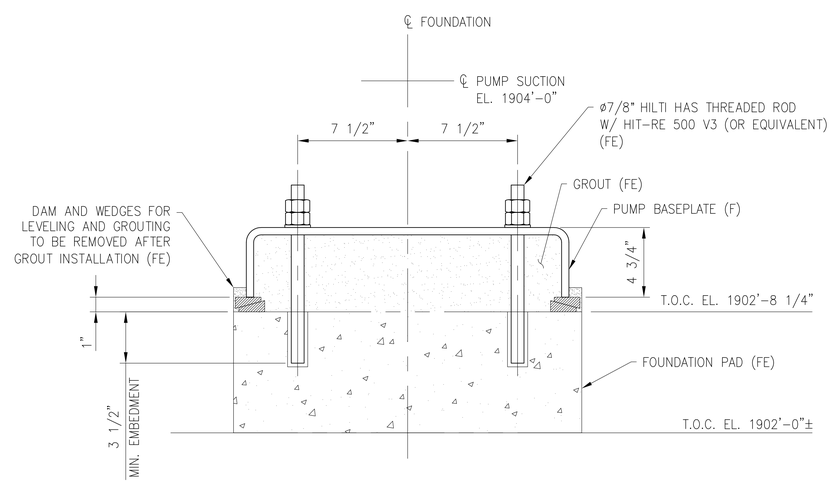

SECTION 1C -01
SCALE: 3"=1'-0"

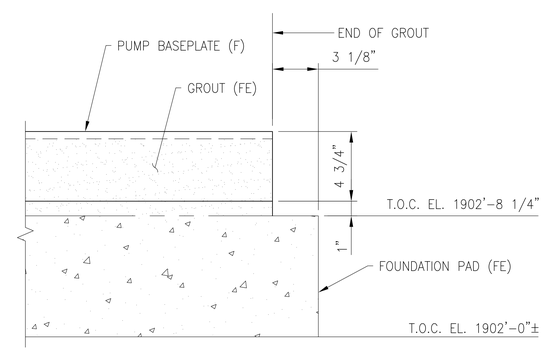

SECTION 1D -01
SCALE: 3"=1'-0"

GENERAL NOTES
COORDINATE LOCATION OF PUMP PACKAGES WITH DRAWING SERIES 225361-01-E730.

FOUNDATION LOADING NOTES
1. PUMP OPERATING WEIGHT = 1,600#
2. CENTER OF GRAVITY PUMP = 9-1/2" ABOVE CONCRETE PAD
3. ALL CONCRETE SHALL HAVE A MINIMUM COMPRESSIVE STRENGTH OF 4000 PSI AT 28 DAYS
4. REINFORCEMENT MUST BE DESIGNED BY CUSTOMER TO DEVELOP ANCHOR RODS.
5. LEGEND:
(F) DENOTES FURNISHED BY A-S-H.
(NF) DENOTES NOT FURNISHED BY A-S-H.
(FE) DENOTES FURNISHED BY ERECTOR.
6. ALL MATERIAL ON THIS DRAWING IS (F) UNLESS NOTED OTHERWISE.
7. SEE STRUCTURAL GENERAL NOTES ON DRAWING 225361-01-E145-01 FOR MORE INFORMATION.
8. OPERATING WEIGHT HAS NOT BEEN INCREASED FOR IMPACT LOADS.

REVISIONS

REV.	DATE	REV. BY	CKD. BY	ENG. APP.	ENG. APP.	REVISION RECORD
A	12/11/25	JT	RJK	RJK	KBJ	INITIAL ISSUE

DRAWN BY	JT	12/11/25
CHECKED BY	RJK	12/11/25
MECH. APP.	RJK	12/11/25
STRUCT. APP.	KBJ	12/11/25
ELECT. APP.		

Allen-Sherman-Hoff
The Babcock & Wilcox Company
Exton, Pennsylvania, U.S.A.

©2023 THE BABCOCK AND WILCOX COMPANY ALL RIGHTS RESERVED.
THIS DRAWING IS THE PROPERTY OF THE BABCOCK AND WILCOX COMPANY (B&W) AND ITS USE IS GOVERNED BY THE TERMS AND CONDITIONS OF THE CONTRACT FOR WHICH IT WAS CREATED. B&W GRANTS A NON-EXCLUSIVE LICENSE TO USE, REPRODUCE AND DISTRIBUTE THIS DRAWING SOLELY FOR THE MAINTENANCE, REPAIR AND OPERATION, AND FOR SOLICITING BIDS FOR THE ERECTION OF, THE EQUIPMENT DISCLOSED HEREIN.

FOUNDATION PLAN
RECIRCULATION PUMP SYSTEM
PLAN & SECTION
UNIT 1

CITY OF HASTINGS
WHELAN ENERGY CENTER
BOTTOM ASH CONVEYOR SYSTEM MODIFICAITON
UNIT 1
HASTINGS, NEBRASKA

CUST. DWG.

SCALE 1 1/2"=1'-0"
CONTRACT 225361-01
DWG 225361-01-E746-01
REV A

225361-01-E790-01

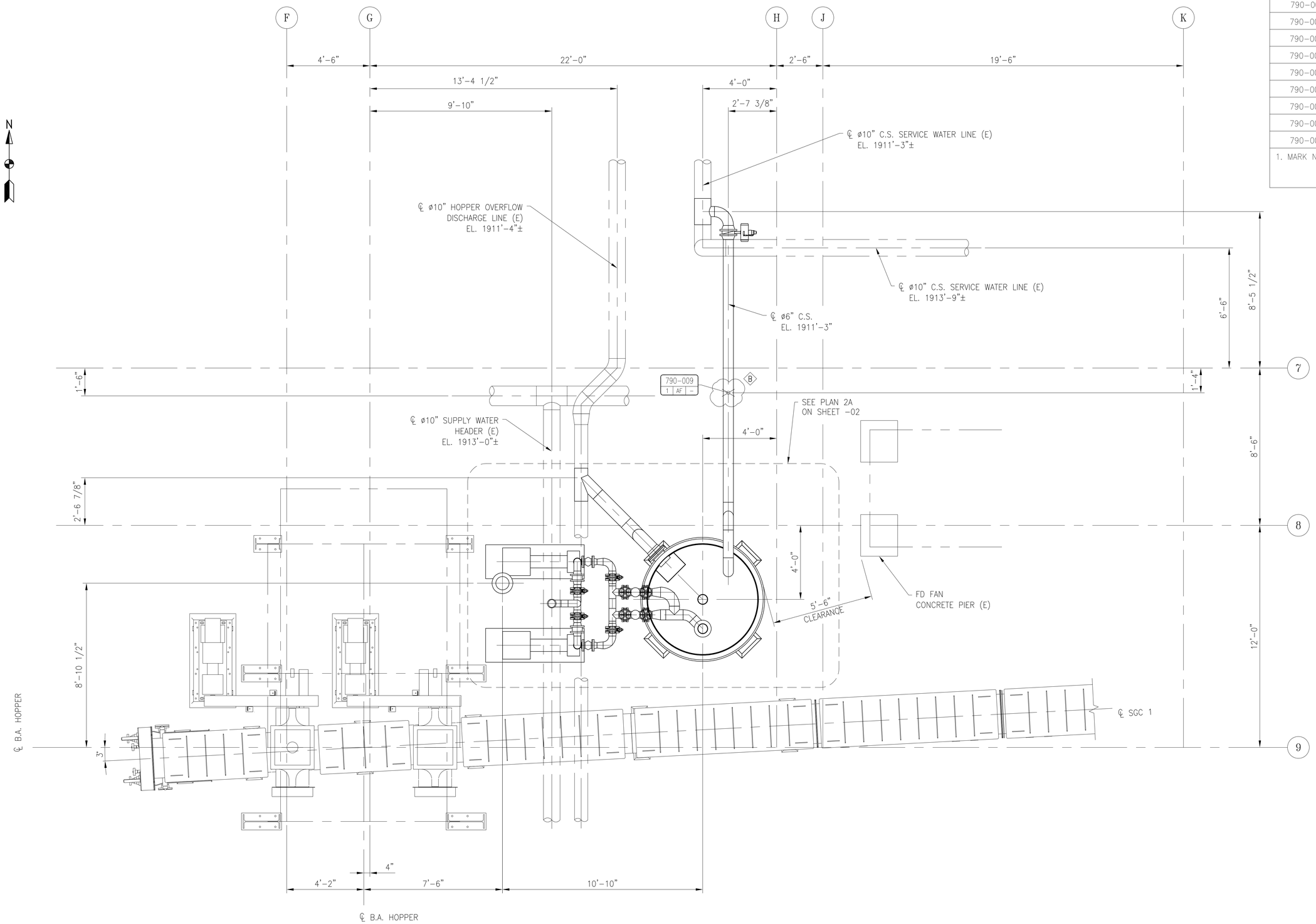

PLAN 1A -01

BILL OF MATERIAL

SHIP UNIT MARK NO.	TYPE	QTY
790-001	GF	1
790-002	AF	2
790-003	AF	2
790-004	AF	1
790-005	GF	1
790-006	AF	1
790-007	GF	1
790-008	GF	1
790-009	AF	1

1. MARK NO. PREFIXED BY: "PS-#-" WHERE # IS THE UNIT NUMBER (EX: PS-1-790-001).

PIPE SUPPORT LOCATION PLANS:	225361-01-E790-SERIES
PIPE SUPPORT DETAILS:	225361-01-PS790-SERIES
PIPE SUPPORT GENERAL NOTES:	225361-01-E189-SERIES
STRUCTURAL GENERAL NOTES:	225361-01-E145-SERIES

REVISIONS

REV.	DATE	REV. BY	CKD. BY	ENG. APP.	ENG. APP.	REVISION RECORD
B	12/11/25	JLZ	KBJ	KBJ		UPDATED PER CUSTOMER COMMENTS
A	11/20/25	JT	KBJ	KBJ		INITIAL ISSUE

DRAWN BY	JT	11/20/25
CHECKED BY	KBJ	11/20/25
MECH. APP.		
STRUCT. APP.	KBJ	11/20/25
ELECT. APP.		

Allen-Sherman-Hoff
The Babcock & Wilcox Company
Exton, Pennsylvania, U.S.A.

©2023 THE BABCOCK AND WILCOX COMPANY ALL RIGHTS RESERVED.
THIS DRAWING IS THE PROPERTY OF THE BABCOCK AND WILCOX COMPANY (B&W) AND ITS USE IS GOVERNED BY THE TERMS AND CONDITIONS OF THE CONTRACT FOR WHICH IT WAS CREATED. B&W GRANTS A NON-EXCLUSIVE LICENSE TO USE, REPRODUCE AND DISTRIBUTE THIS DRAWING SOLELY FOR THE MAINTENANCE, REPAIR AND OPERATION, AND FOR SOLICITING BIDS FOR THE ERECTION OF, THE EQUIPMENT DISCLOSED HEREIN.

PIPE SUPPORT LOCATION PLAN
RECIRCULATION PUMP SYSTEM
PLAN
UNIT 1

CITY OF HASTINGS
WHELAN ENERGY CENTER
BOTTOM ASH CONVEYOR SYSTEM MODIFICAITON
UNIT 1
HASTINGS, NEBRASKA

CUST. DWG.

SCALE 1/2"=1'-0"
CONTRACT 225361-01
DWG 225361-01-E790-01
REV B

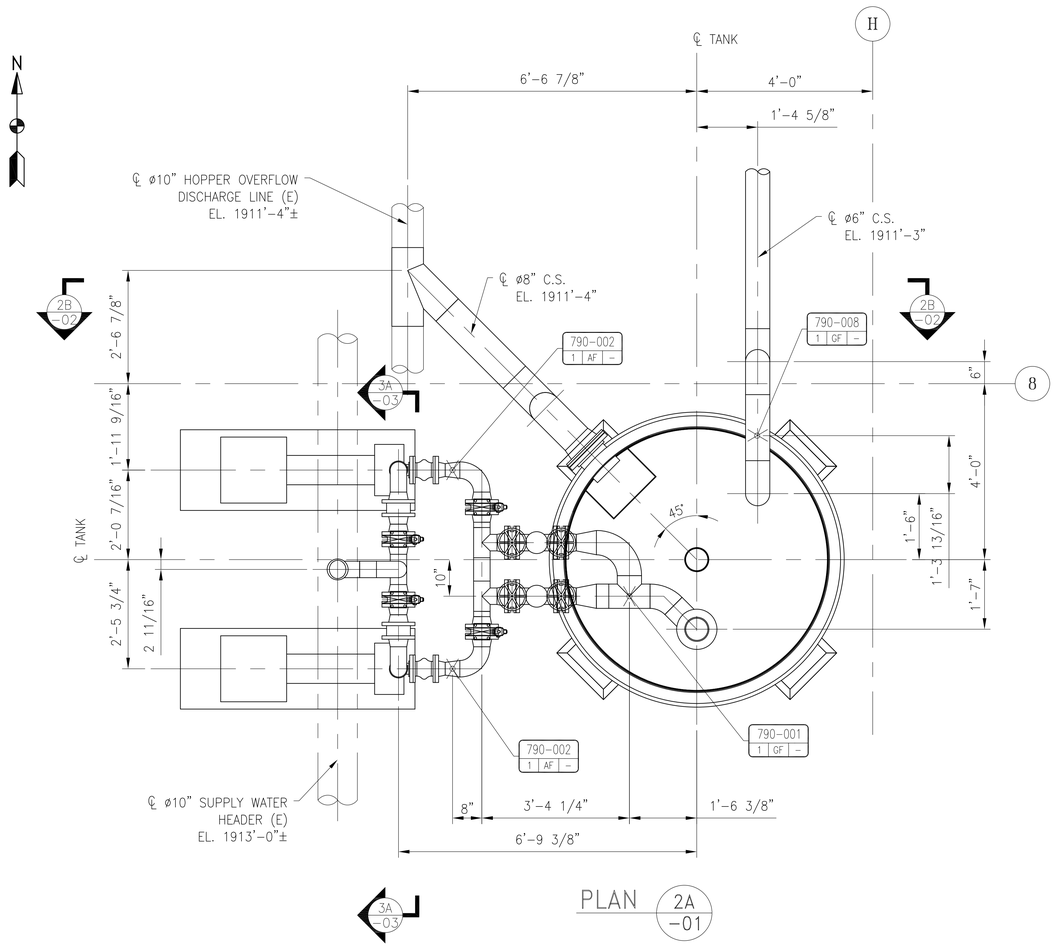

PLAN 2A -01

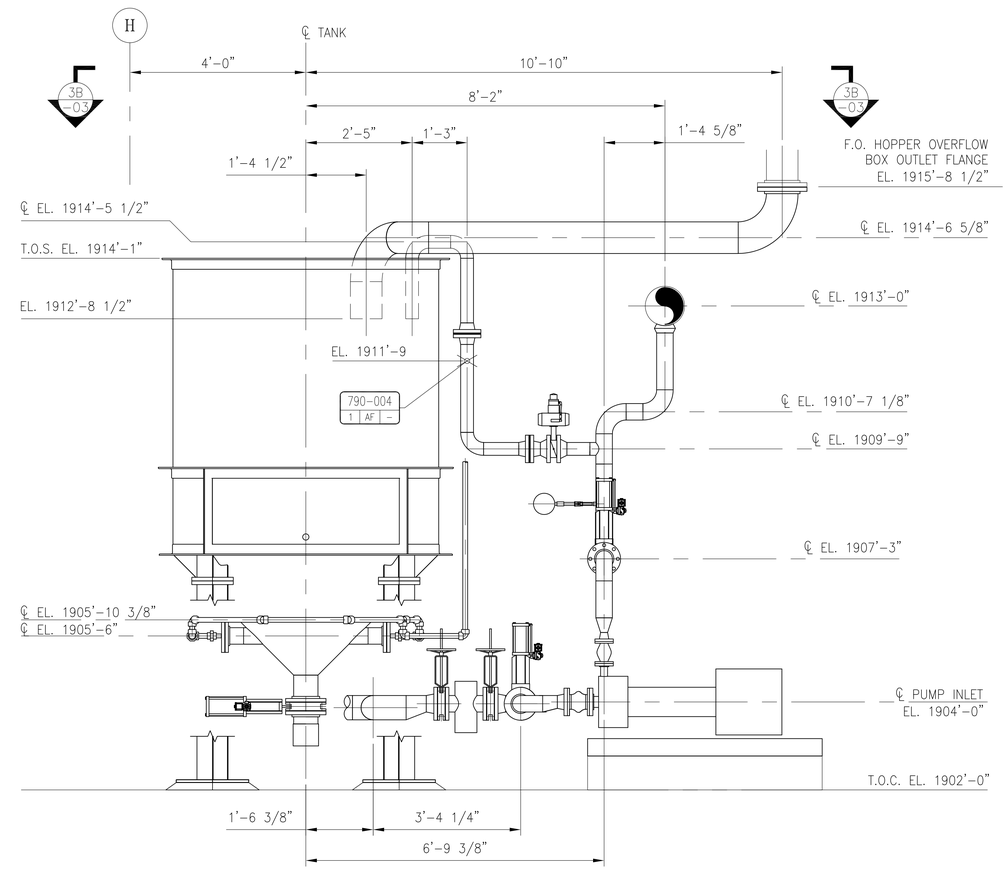

ELEVATION 2B -02
LOOKING SOUTH
OVERFLOW & MAKEUP PIPING NOT SHOWN FOR CLARITY

PIPE SUPPORT LOCATION PLANS:	225361-01-E790-SERIES
PIPE SUPPORT DETAILS:	225361-01-PS790-SERIES
PIPE SUPPORT GENERAL NOTES:	225361-01-E189-SERIES
STRUCTURAL GENERAL NOTES:	225361-01-E145-SERIES

REVISIONS

REV.	DATE	REV. BY	CKD. BY	ENG. APP.	ENG. APP.	REVISION RECORD
A	11/20/25	JT	KBJ	KBJ		INITIAL ISSUE

DRAWN BY	JT	11/20/25
CHECKED BY	KBJ	11/20/25
MECH. APP.		
STRUCT. APP.	KBJ	11/20/25
ELECT. APP.		

Allen-Sherman-Hoff
The Babcock & Wilcox Company
Exton, Pennsylvania, U.S.A.

©2023 THE BABCOCK AND WILCOX COMPANY ALL RIGHTS RESERVED.
THIS DRAWING IS THE PROPERTY OF THE BABCOCK AND WILCOX COMPANY (B&W) AND ITS USE IS GOVERNED BY THE TERMS AND CONDITIONS OF THE CONTRACT FOR WHICH IT WAS CREATED. B&W GRANTS A NON-EXCLUSIVE LICENSE TO USE, REPRODUCE AND DISTRIBUTE THIS DRAWING SOLELY FOR THE MAINTENANCE, REPAIR AND OPERATION, AND FOR SOLICITING BIDS FOR THE ERECTION OF, THE EQUIPMENT DISCLOSED HEREIN.

PIPE SUUPORT LOCATION PLAN
RECIRCULATION PUMP SYSTEM
PLAN & ELEVATION
UNIT 1

CITY OF HASTINGS
WHELAN ENERGY CENTER
BOTTOM ASH CONVEYOR SYSTEM MODIFICAITON
UNIT 1
HASTINGS, NEBRASKA

CUST. DWG.

SCALE 3/4"=1'-0"
CONTRACT 225361-01
DWG 225361-01-E790-02
REV A

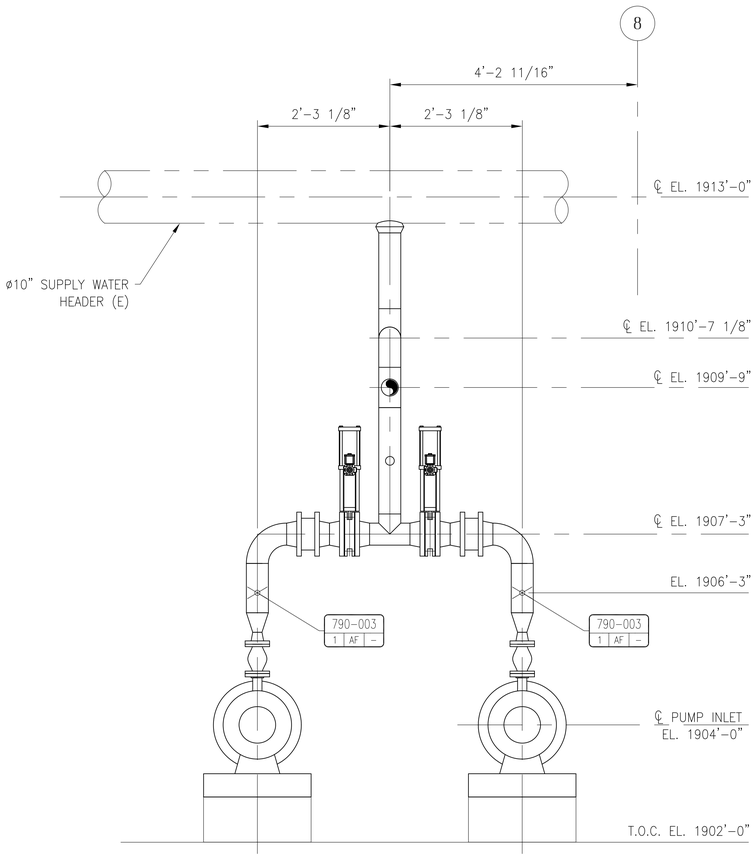

SECTION 3A -02
LOOKING WEST

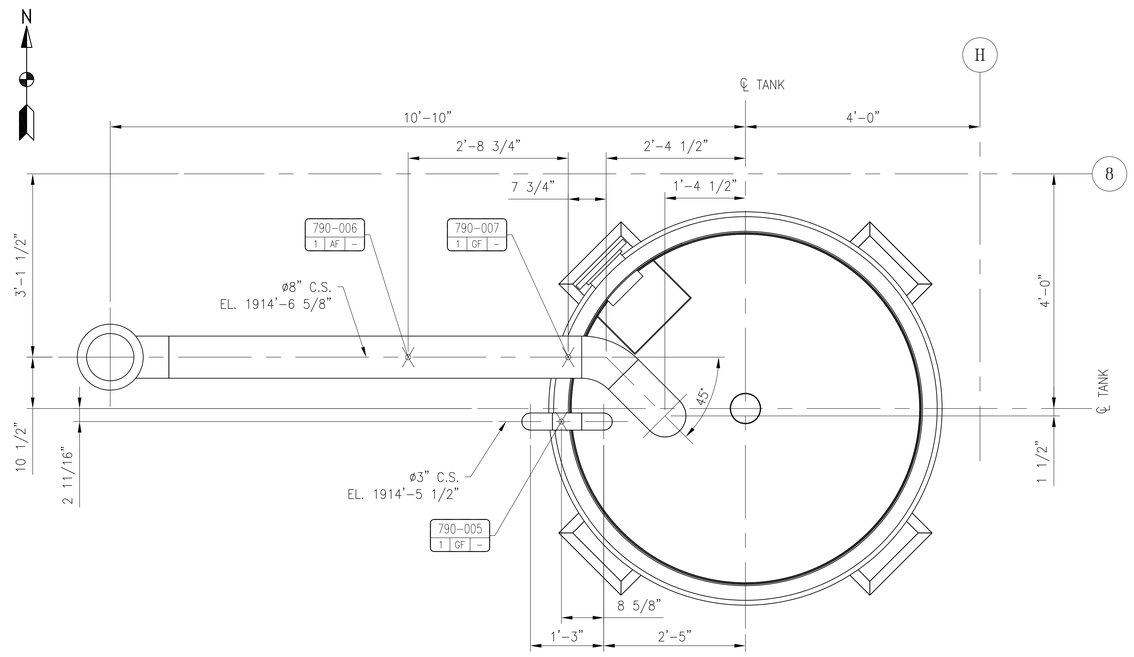

SECTION 3B -02

PIPE SUPPORT LOCATION PLANS:	225361-01-E790-SERIES
PIPE SUPPORT DETAILS:	225361-01-PS790-SERIES
PIPE SUPPORT GENERAL NOTES:	225361-01-E189-SERIES
STRUCTURAL GENERAL NOTES:	225361-01-E145-SERIES

REVISIONS

REV.	DATE	REV. BY	CKD. BY	ENG. APP.	ENG. APP.	REVISION RECORD
A	11/20/25	JT	KBJ	KBJ		INITIAL ISSUE

DRAWN BY	JT	11/20/25
CHECKED BY	KBJ	11/20/25
MECH. APP.		
STRUCT. APP.	KBJ	11/20/25
ELECT. APP.		

Allen-Sherman-Hoff
The Babcock & Wilcox Company
Exton, Pennsylvania, U.S.A.

©2023 THE BABCOCK AND WILCOX COMPANY ALL RIGHTS RESERVED.
THIS DRAWING IS THE PROPERTY OF THE BABCOCK AND WILCOX COMPANY (B&W) AND ITS USE IS GOVERNED BY THE TERMS AND CONDITIONS OF THE CONTRACT FOR WHICH IT WAS CREATED. B&W GRANTS A NON-EXCLUSIVE LICENSE TO USE, REPRODUCE AND DISTRIBUTE THIS DRAWING SOLELY FOR THE MAINTENANCE, REPAIR AND OPERATION, AND FOR SOLICITING BIDS FOR THE ERECTION OF, THE EQUIPMENT DISCLOSED HEREIN.

PIPE SUUPORT LOCATION PLAN
RECIRCULATION PUMP SYSTEM
SECTIONS
UNIT 1

CITY OF HASTINGS
WHELAN ENERGY CENTER
BOTTOM ASH CONVEYOR SYSTEM MODIFICAITON
UNIT 1
HASTINGS, NEBRASKA

CUST. DWG.

SCALE 1"=1'-0"
CONTRACT 225361-01
DWG 225361-01-E790-03
REV A

PAINT SPECIFICATION

TO:	**J. Bannan**	**CC:**	**R. Katona** **K. Jones**
FROM:	**J. O'Malley**		
DATE:	**12 November 2025**		
CUSTOMER:	**Whelan Energy Center** **City of Hastings** **Bottom Ash Conveyor System Modification, Unit 1**		
CONTRACT:	**225361-01**		

Paint Specification Number: 225361-01-PAINT Rev. B

☐ New

☒ Revision to Paint Specification, VOID all previous revisions.

☐ Revised Paint Specification Number, change all documents accordingly for this contract.

☐ Cancel Paint Specification Number _____ for this contract.

This Paint Specification is retroactive for all previously issued BOM's.

Revision (A) – Initial Submittal

Revision (B) – Revised Paint Color for PAINT-B per Customer Comments

PAINT SPECIFICATION

A-S-H Paint Specification No.:	225361-01-PAINT-A	12 November 2025 Rev. B
A-S-H Contract Number:	225361-01	
Customer:	Whelan Energy Center, City of Hastings	
Customer/Engineer's Specification:	HU 2025-101	

Category: **Carbon Steel Structural Shapes, Pipe Supports**, and Other Carbon Steel Products Unless Otherwise Superseded by a Specific Contract Paint Specification

Cleaning and Surface Preparation Requirements:

1. Remove all oil, grease, dirt, etc., in accordance with SSPC-SP1 "Solvent Cleaning".
2. Remove rust, scale, weld spatter and other detrimental foreign matter in accordance with SSPC-SP2 "Hand Tool Cleaning" or SSPC-SP3 "Power Tool Cleaning" at a minimum.
3. All material must be pickled prior to galvanizing.

Primer/Finish Coat: Hot-Dip Galvanizing

No. of Coats: 1 **Dry Film Thickness:** Per ASTM A-123

Application: In accordance with ASTM A-123, A-153, and/or ASTM A-385

Note: **All pipe support hardware shall be galvanized or mechanically plated.**

Field weld edges are to be left unpainted for a distance of three (3) inches to either side of the weld areas. These edges are to be coated with a weldable primer such as Deoxaluminate, Bloxide or A-S-H approved equal.

Any necessary repairs shall be conducted in accordance with ASTM A-780 "*Practice for Repair of Damaged and Uncoated Areas of Hot-Dip Galvanized Coatings*".

PAINT SPECIFICATION

A-S-H Paint Specification No.: 225361-01-PAINT-B 12 November 2025 Rev. B

A-S-H Contract Number: 225361-01

Customer: Whelan Energy Center, City of Hastings

Customer/Engineer's Specification: HU 2025-101

Category: **Overflow Tank located Indoors** (including integrated structural steel)

Cleaning and Surface Preparation Requirements:

1. Remove all oil, grease, dirt, etc., in accordance with SSPC-SP1 "Solvent Cleaning".
2. Surface preparation in accordance with SSPC-SP6 "Commercial Blast Cleaning" at a minimum.

Primer Coat(s): Carboline Carbozinc 859 Organic Zinc Rich Epoxy

No. of Coats: 1 **Dry Film Thickness:** 6.0-8.0 mils DFT

Finish Coat(s): Carboline Carboguard 890 Epoxy

No. of Coats: 1 **Dry Film Thickness:** 2.0-3.0 mils DFT

FINISH COLOR SHALL BE: "Dark Bronze" per Customer, see Note below.

Application: In accordance with SSPC-PA1 "Paint Application Specification for Shop, Field and Maintenance Painting" and Paint Manufacturer's Recommendations.

Note: **Field weld edges are to be left unpainted for a distance of three (3) inches to either side of the weld areas. These edges are to be coated with a weldable primer such as Deoxaluminate, Bloxide or A-S-H approved equal.**

Customer Custom Color: Hastings Utility Windigo Brown

Blend-a-Color		OZ	32	64	128
B1	Black	2	23	-	1
G2	New Green	4	58	-	-
R2	Maroon	2	4	1	-
Y3	Deep Gold	-	4	-	-
W1	White	-	12	-	-

PAINT SPECIFICATION

A-S-H Paint Specification No.:	225361-01-PAINT-C	12 November 2025 Rev. B
A-S-H Contract Number:	225361-01	
Customer:	Whelan Energy Center, City of Hastings	
Customer/Engineer's Specification:	HU 2025-101	
Category:	**A-S-H Standard Products and Assemblies**	

Cleaning and Surface Preparation Requirements:

1. Remove all oil, grease, dirt, etc. in accordance with SSPC-SP1 "Solvent Cleaning".
2. Remove rust, scale, weld spatter and other detrimental foreign matter in accordance with SSPC-SP6 "Commercial Blast Cleaning" at a minimum.

Allen-Sherman-Hoff Standard Paint
Manufactured by: International Protective Coatings

Primer/Finish Coat: International – Interlac 789 Alkyd Paint **Color**: MSC 72294 BLUE

No. Of Coats: 1 **Dry Film Thickness:** 3 to 4 MILS DFT

Application: In accordance with SSPC-PA1 "Shop, Field and Maintenance Painting" and Paint Manufacturer's Recommendation.

Note: **All paint products shall be lead and chromate free.**

PAINT SPECIFICATION

A-S-H Paint Specification No.:	225361-01-PAINT-D	12 November 2025 Rev. B
A-S-H Contract Number:	225361-01	
Customer:	Whelan Energy Center, City of Hastings	
Customer/Engineer's Specification:	HU 2025-101	

Category: **Standard Electrical and Mechanical Equipment to include: Motors, Valves, Solenoids, Limit Switches, etc.**

Cleaning and Surface Preparation Requirements:

1. Remove all oil, grease, dirt, etc., in accordance with SSPC-SP1 "Solvent Cleaning".
2. Surface preparation in accordance with manufacturer's standard paint/coating system.

Primer/Finish Coat(s): In accordance with the manufacturer's standard paint/coating system.

No. of Coats: 1 **Dry Film Thickness:** Per paint manufacturer's recommendation.

Application: In accordance with SSPC-PA1 "Paint Application Specification for Shop, Field and Maintenance Painting" and Paint Manufacturer's Recommendations.

Note: **All paint products shall be lead and chromate free.**

PAINT SPECIFICATION

A-S-H Paint Specification No.:	225361-01-PAINT-E	12 November 2025 Rev. B
A-S-H Contract Number:	225361-01	
Customer:	Whelan Energy Center, City of Hastings	
Customer/Engineer's Specification:	HU 2025-101	

Category: **Ladders, Caged Ladders, Handrail and Machine Guards**

Cleaning and Surface Preparation Requirements:

1. Remove all oil, grease, dirt, etc., in accordance with SSPC-SP1 "Solvent Cleaning".
2. Surface preparation in accordance with manufacturer's standard paint/coating system.

Primer/Finish Coat(s): In accordance with the manufacturer's standard paint/coating system.

No. of Coats: 1 **Dry Film Thickness:** Per paint manufacturer's recommendation.

Application: In accordance with SSPC-PA1 "Paint Application Specification for Shop, Field and Maintenance Painting" and Paint Manufacturer's Recommendations.

Note: **All paint products shall be lead and chromate free.**

Ladders, Caged Ladders, Guards and Handrail are to be painted SAFETY YELLOW.

PAINT SPECIFICATION

A-S-H Paint Specification No.:	225361-01-PAINT-F	12 November 2025 Rev. B
A-S-H Contract Number:	225361-01	
Customer:	Whelan Energy Center, City of Hastings	
Customer/Engineer's Specification:	HU 2025-101	

Category: **Hardware (Connection Bolts, Nuts, Washers, and Compressible Washer-Type, Direct-Tension Indicators)**

Cleaning and Surface Preparation Requirements:

1. Remove all oil, grease, dirt, etc., in accordance with SSPC-SP1 "Solvent Cleaning".
2. Surface preparation in accordance with manufacturer's standard paint/coating system.

Primer/Finish Coat(s): In accordance with the manufacturer's standard paint/coating system.

No. of Coats: 1 **Dry Film Thickness:** Per paint manufacturer's recommendation.

Application: In accordance with SSPC-PA1 "Paint Application Specification for Shop, Field and Maintenance Painting" and Paint Manufacturer's Recommendations.

Note: **All Structural Bolts (ASTM F3125, Grade A325, Type 1), nuts, washers and compressible washer-type, direct-tension indicators shall be mechanically galvanized per ASTM B695 Class 50.**

Nuts shall be tapped after galvanizing to minimum diametral amounts specified in ASTM A563. Coat nuts with waterproof lubricant, clean and dry to touch.

Flat and beveled washers shall be mechanically galvanized hardened washers conforming to ASTM F436.

PAINT SPECIFICATION

A-S-H Paint Specification No.:	225361-01-PAINT-G	12 November 2025 Rev. B
A-S-H Contract Number:	225361-01	
Customer:	Whelan Energy Center, City of Hastings	
Customer/Engineer's Specification:	HU 2025-101	
Category:	**Carbon Steel Pipe**	

Cleaning and Surface Preparation Requirements:

3. Remove all oil, grease, dirt, etc., in accordance with SSPC-SP1 "Solvent Cleaning".
4. Surface preparation in accordance with SSPC-SP6 "Commercial Blast Cleaning" at a minimum.

Primer Coat(s): Carboline Carbozinc 859 Organic Zinc Rich Epoxy

No. of Coats: 1 **Dry Film Thickness:** 6.0-8.0 mils DFT

Finish Coat(s): Carboline Carboguard 890 Epoxy

No. of Coats: 1 **Dry Film Thickness:** 2.0-3.0 mils DFT

FINISH COLOR SHALL BE: 2716 "Edison Gray"

Application: In accordance with SSPC-PA1 "Paint Application Specification for Shop, Field and Maintenance Painting" and Paint Manufacturer's Recommendations.

Note: **All field weld areas shall be prepped and coated with a weldable primer such as Deoxaluminate or Bloxide for a distance of three inches (3") adjacent to the weld joint.**

This specification is only applicable to pipe sizes 3" and larger.

Raised faces of flanges shall not be painted.

225361-01-PS790-001

BILL OF MATERIAL

SHIP UNIT		MATERIAL						
QTY	MARK NO.	PIECE (x)	PIECE QTY	DESCRIPTION	FIG.	WIDTH	LENGTH	REMARKS
1	PS-1-790-001-1	1		SUPPORT WELDMENT		–	–	
		1a	1	PL. 1/2"		0'-11"	1'-1"	–
		1b	1	4"ø SCH 40 C.S. PIPE W/ 1/4 VENT HOLE		–	1'-5 1/8"	–
		1c	1	PL. 1/2"		0'-8"	0'-8"	–
2	PS-1-790-001-2	2		L2x2x1/8		–	0'-3 1/2"	
1	PS-1-790-001-3	3		PL. 1/4"		0'-11 1/4"	0'-3 1/2"	

1. HARDWARE FIGURES ARE GIVEN AS REFERENCE ONLY. MAY USE EQUIVALENT FROM ANOTHER MANUFACTURER OR EQUIVALENT SHOP FABRICATION.

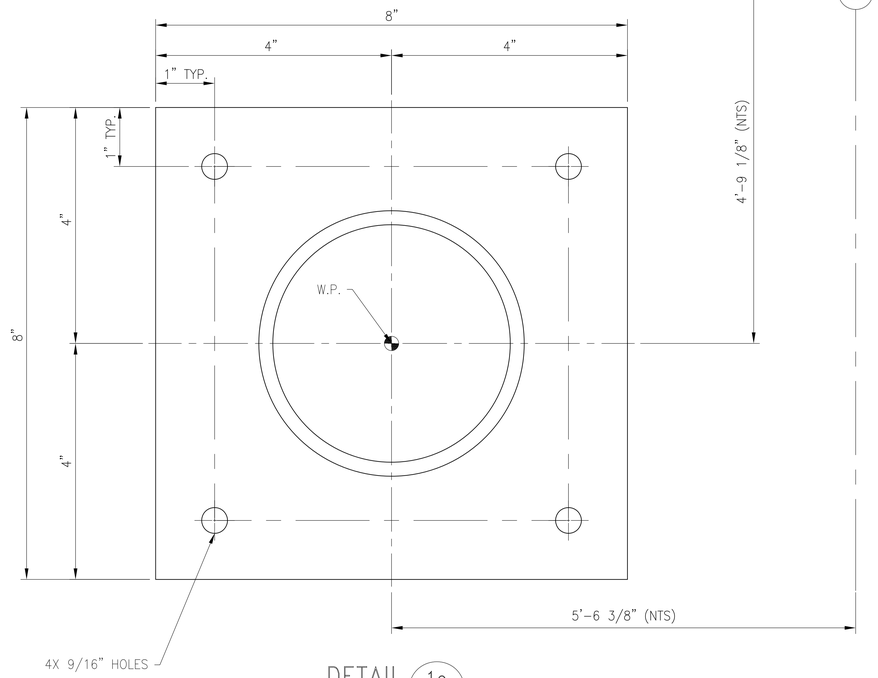

DETAIL 1c

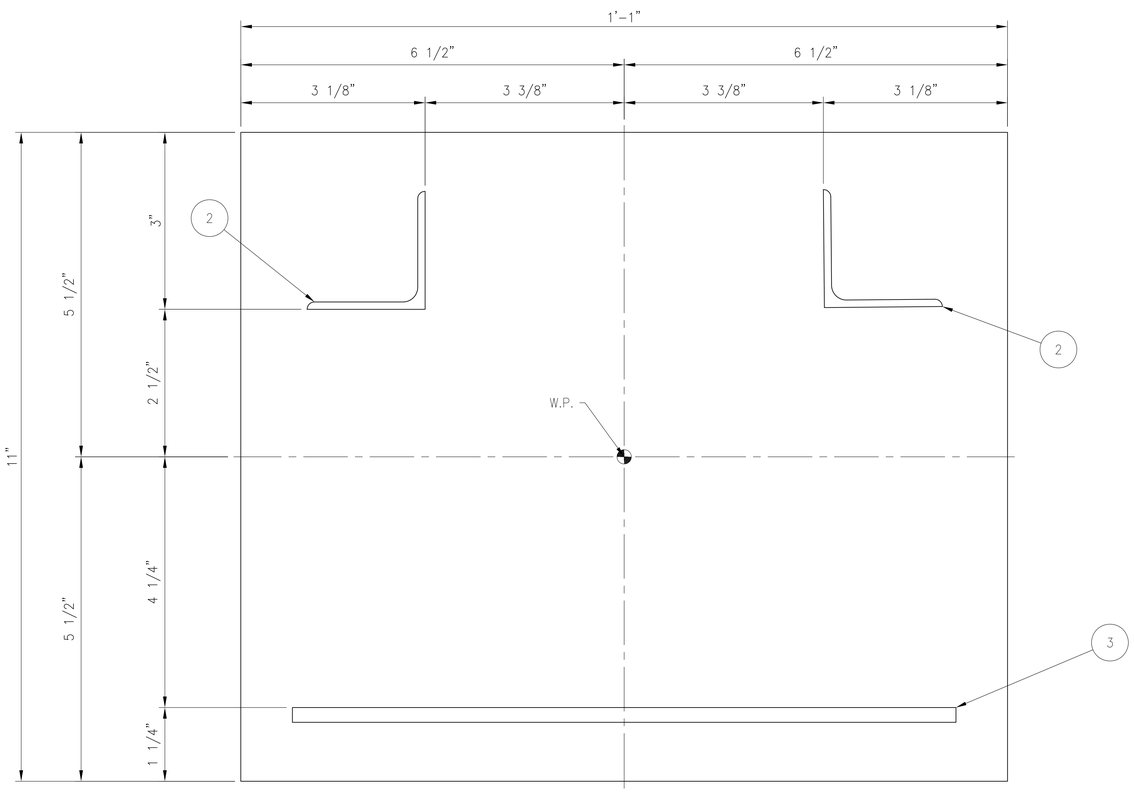

DETAIL 1a

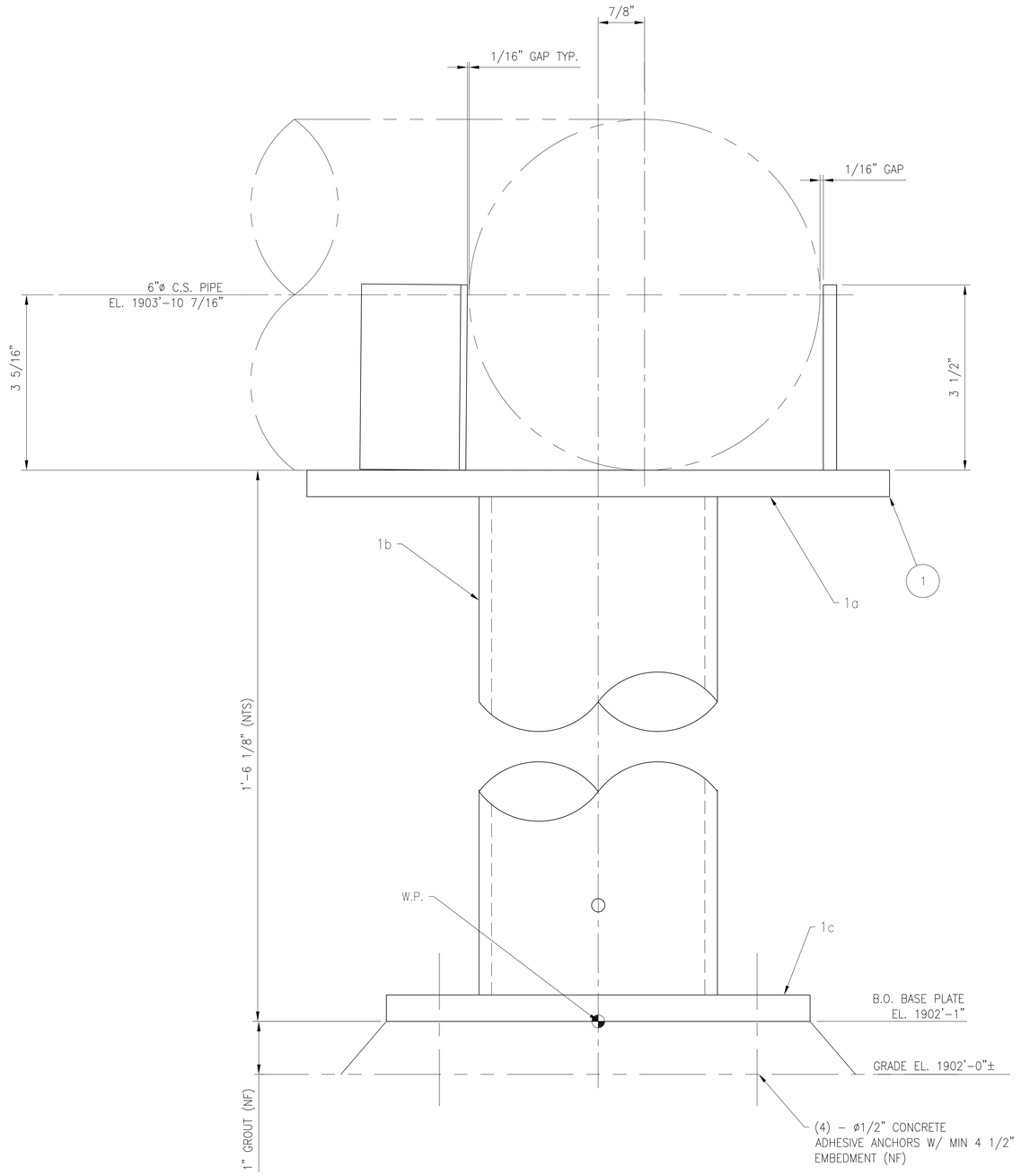

PS-1-790-001

LOOKING EAST
GUIDE

PIPE SUPPORT LOCATION PLANS:	225361-01-E790-SERIES
PIPE SUPPORT DETAILS:	225361-01-PS790-SERIES
PIPE SUPPORT GENERAL NOTES:	225361-01-E189-SERIES
STRUCTURAL GENERAL NOTES:	225361-01-E145-SERIES

REVISIONS

REV.	DATE	REV. BY	CKD. BY	ENG. APP.	ENG. APP.	REVISION RECORD
A	11/20/25	JLZ	KBJ	KBJ		INITIAL ISSUE

DRAWN BY	JLZ	11/20/25
CHECKED BY	KBJ	11/20/25
MECH. APP.		
STRUCT. APP.	KBJ	11/20/25
ELECT. APP.		

Allen-Sherman-Hoff
The Babcock & Wilcox Company
Exton, Pennsylvania, U.S.A.

© 2023 THE BABCOCK AND WILCOX COMPANY ALL RIGHTS RESERVED.
THIS DRAWING IS THE PROPERTY OF THE BABCOCK AND WILCOX COMPANY (B&W) AND ITS USE IS GOVERNED BY THE TERMS AND CONDITIONS OF THE CONTRACT FOR WHICH IT WAS CREATED. B&W GRANTS A NON-EXCLUSIVE LICENSE TO USE, REPRODUCE AND DISTRIBUTE THIS DRAWING SOLELY FOR THE MAINTENANCE, REPAIR AND OPERATION, AND FOR SOLICITING BIDS FOR THE ERECTION OF, THE EQUIPMENT DISCLOSED HEREIN.

PIPE SUPPORT DETAILS
RECIRCULATION PUMP SYSTEM
PS-1-790-001
UNIT 1

CITY OF HASTINGS
WHELAN ENERGY CENTER
BOTTOM ASH CONVEYOR SYSTEM MODIFICAITON
UNIT 1
HASTINGS, NEBRASKA

CUST. DWG.

SCALE 1:1
CONTRACT 225361-01
DWG 225361-01-PS790-001
REV A

225361-01-PS790-002

BILL OF MATERIAL

SHIP UNIT		MATERIAL							
QTY	MARK NO.	PIECE (x)	PIECE QTY	DESCRIPTION	FIG.	WIDTH	LENGTH	REMARKS
1	PS-1-790-002-1	1		SUPPORT WELDMENT		–	–	
		1a	1	PL. 3/8"		0'-5"	0'-5"	–
		1b	1	PL. 3/8"		0'-2"	0'-4"	–
		1c	1	4"ø SCH 40 C.S. PIPE W/ 1/4" VENT HOLE		–	1'-4 1/8" (B)	–
		1d	1	PL. 1/2"		0'-8"	0'-8"	–

1. HARDWARE FIGURES ARE GIVEN AS REFERENCE ONLY. MAY USE EQUIVALENT FROM ANOTHER MANUFACTURER OR EQUIVALENT SHOP FABRICATION.

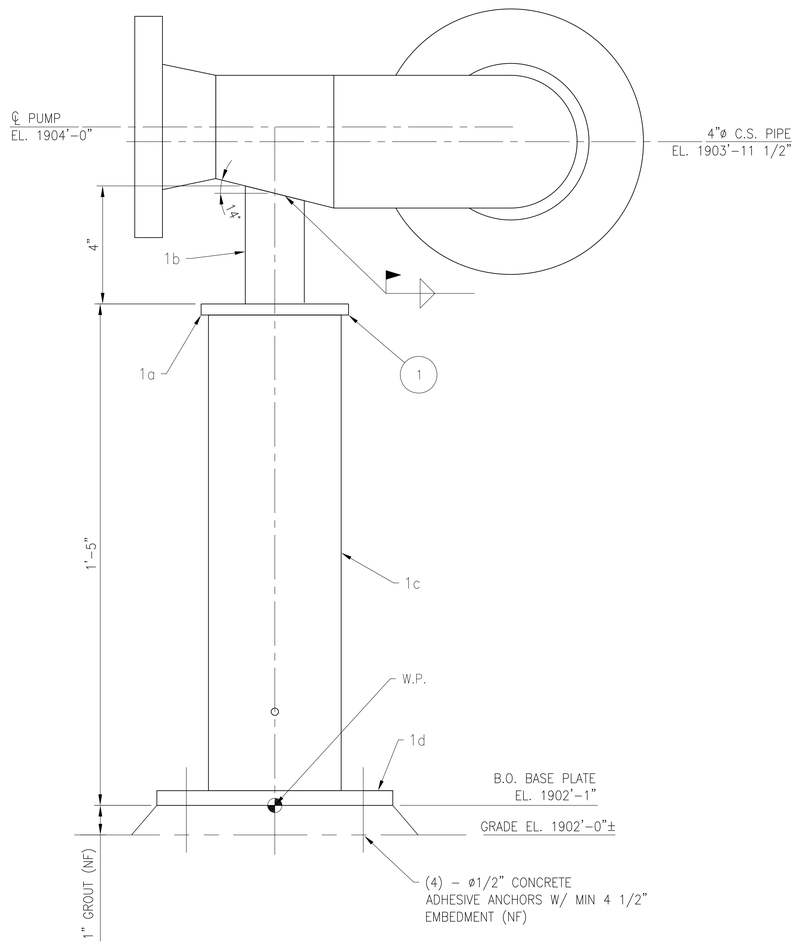

PS-1-790-002

LOOKING NORTH
ANCHOR

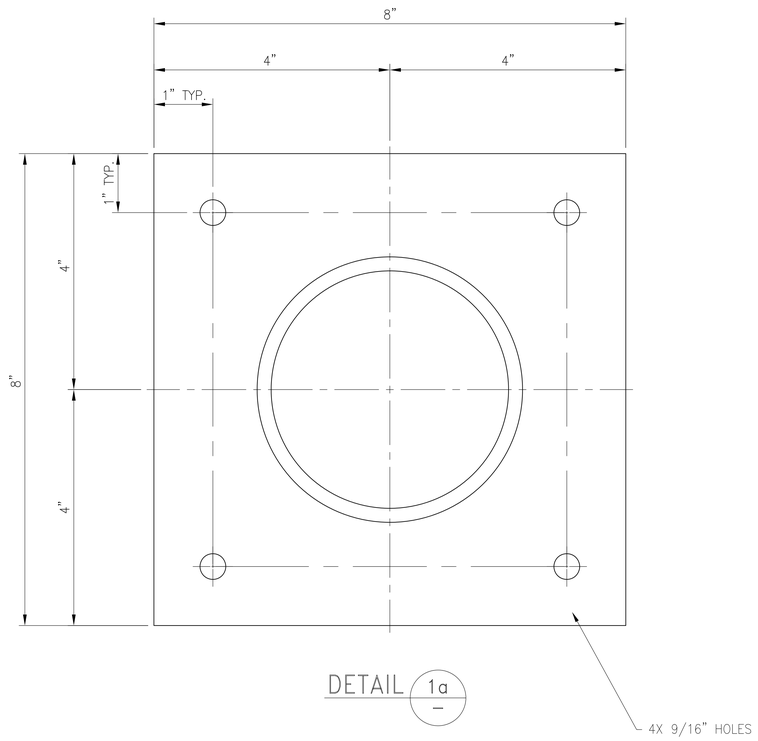

DETAIL 1a
–

PIPE SUPPORT LOCATION PLANS:	225361-01-E790-SERIES
PIPE SUPPORT DETAILS:	225361-01-PS790-SERIES
PIPE SUPPORT GENERAL NOTES:	225361-01-E189-SERIES
STRUCTURAL GENERAL NOTES:	225361-01-E145-SERIES

REVISIONS

REV.	DATE	REV. BY	CKD. BY	ENG. APP.	ENG. APP.	REVISION RECORD
B	12/11/25	JLZ	KBJ	KBJ		UPDATED PER CUSTOMER COMMENTS
A	11/20/25	JLZ	KBJ	KBJ		INITIAL ISSUE

DRAWN BY	JLZ	11/20/25
CHECKED BY	KBJ	11/20/25
MECH. APP.		
STRUCT. APP.	KBJ	11/20/25
ELECT. APP.		

Allen-Sherman-Hoff
The Babcock & Wilcox Company
Exton, Pennsylvania, U.S.A.

©2023 THE BABCOCK AND WILCOX COMPANY ALL RIGHTS RESERVED.
THIS DRAWING IS THE PROPERTY OF THE BABCOCK AND WILCOX COMPANY (B&W) AND ITS USE IS GOVERNED BY THE TERMS AND CONDITIONS OF THE CONTRACT FOR WHICH IT WAS CREATED. B&W GRANTS A NON-EXCLUSIVE LICENSE TO USE, REPRODUCE AND DISTRIBUTE THIS DRAWING SOLELY FOR THE MAINTENANCE, REPAIR AND OPERATION, AND FOR SOLICITING BIDS FOR THE ERECTION OF, THE EQUIPMENT DISCLOSED HEREIN.

PIPE SUPPORT DETAILS
RECIRCULATION PUMP SYSTEM
PS-1-790-002
UNIT 1

CITY OF HASTINGS
WHELAN ENERGY CENTER
BOTTOM ASH CONVEYOR SYSTEM MODIFICAITON
UNIT 1
HASTINGS, NEBRASKA

CUST. DWG.

SCALE 6" = 1'-0"
CONTRACT 225361-01
DWG 225361-01-PS790-002
REV B

225361-01-PS790-003

BILL OF MATERIAL

SHIP UNIT		MATERIAL						
QTY	MARK NO.	PIECE (x)	PIECE QTY	DESCRIPTION	FIG.	WIDTH	LENGTH	REMARKS
1	PS-1-790-003-1	1		SUPPORT WELDMENT		–	–	
		1a	1	PL. 1/2"		0'-6"	0'-7"	–
		1b	1	3"ø SCH 40 C.S. PIPE W/ 1/4" VENT HOLE		–	1'-2 5/16"	–
2	PS-1-790-003-2	2		U-BOLT FOR 4"ø C.S. PIPE	ANVIL FIG. 137	–	–	
1	PS-1-790-003-3	3		SUPPORT WELDMENT		–		
		3a	1	W4X13		–	4'-4"	–
		3b	1	PL. 3/4"		0'-8"	0'-8"	–
1	PS-1-790-003-4	4		STIFFNER PLATE 3/8" (B)		0'-10"	0'-10"	

1. HARDWARE FIGURES ARE GIVEN AS REFERENCE ONLY. MAY USE EQUIVALENT FROM ANOTHER MANUFACTURER OR EQUIVALENT SHOP FABRICATION.

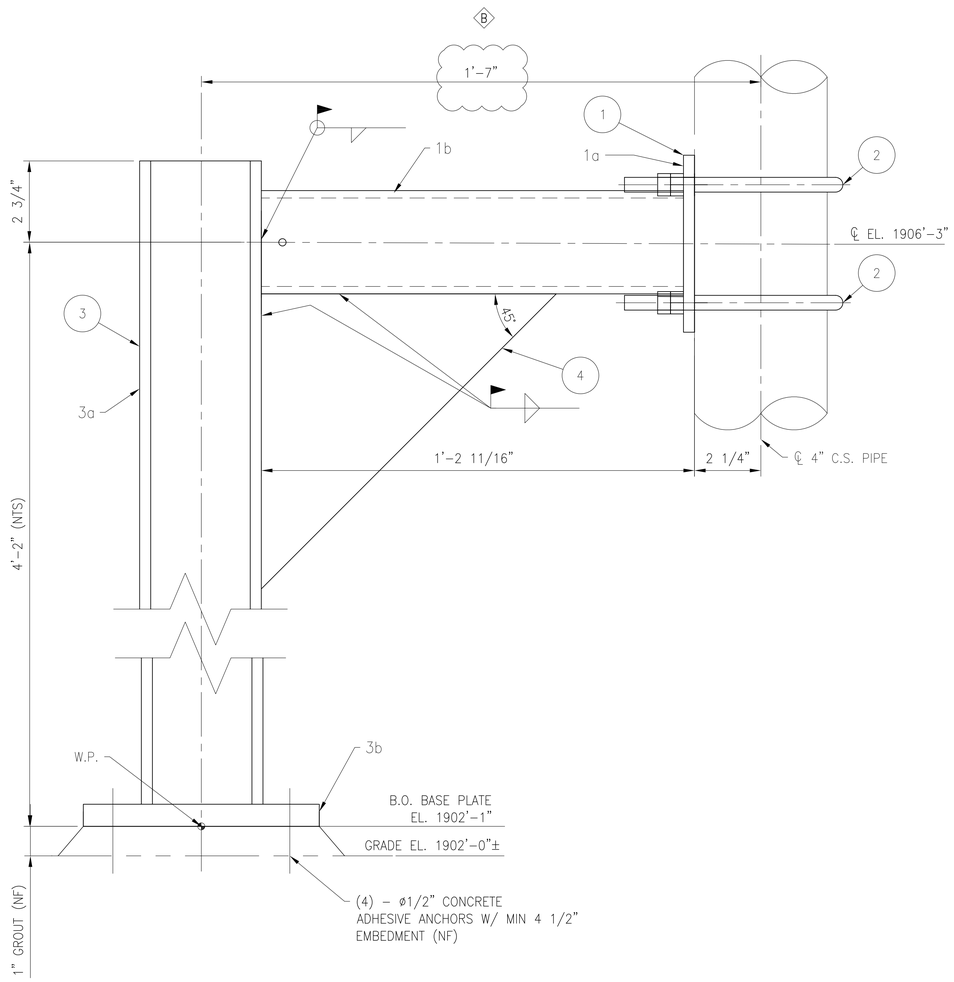

PS-1-790-003

LOOKING EAST
ANCHOR

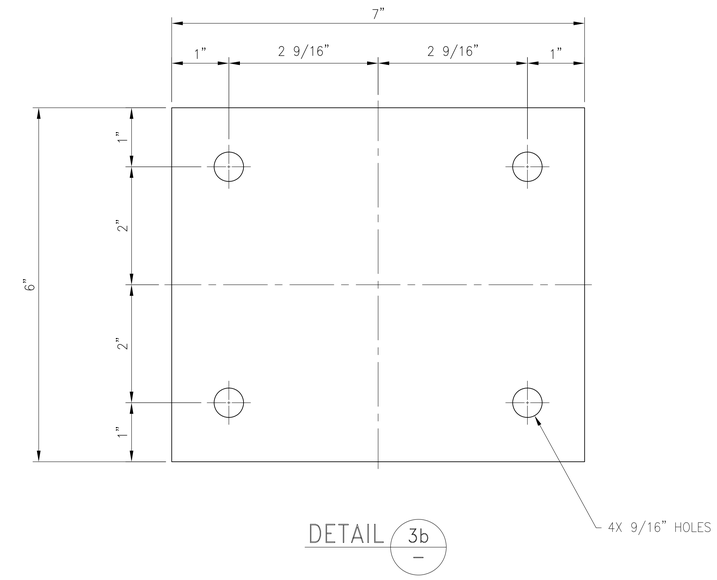

DETAIL 3b / –

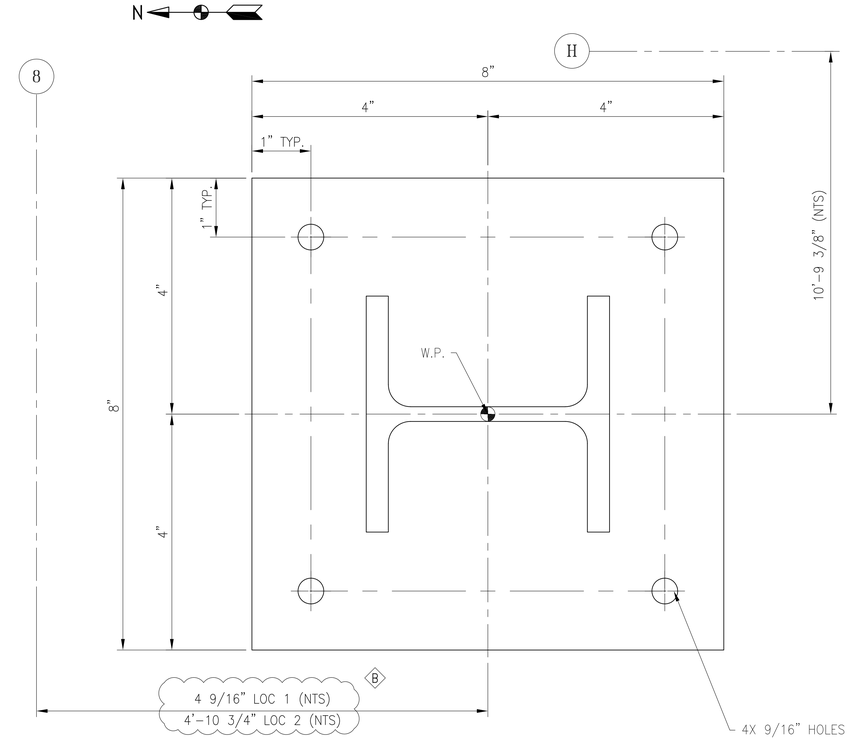

DETAIL 1a / –

PIPE SUPPORT LOCATION PLANS:	225361-01-E790-SERIES
PIPE SUPPORT DETAILS:	225361-01-PS790-SERIES
PIPE SUPPORT GENERAL NOTES:	225361-01-E189-SERIES
STRUCTURAL GENERAL NOTES:	225361-01-E145-SERIES

REVISIONS

REV.	DATE	REV. BY	CKD. BY	ENG. APP.	ENG. APP.	REVISION RECORD
B	12/11/25	JLZ	KBJ	KBJ		UPDATED PER CUSTOMER COMMENTS
A	11/20/25	JLZ	KBJ	KBJ		INITIAL ISSUE

DRAWN BY	JLZ	11/20/25
CHECKED BY	KBJ	11/20/25
MECH. APP.		
STRUCT. APP.	KBJ	11/20/25
ELECT. APP.		

Allen-Sherman-Hoff
The Babcock & Wilcox Company
Exton, Pennsylvania, U.S.A.

©2023 THE BABCOCK AND WILCOX COMPANY ALL RIGHTS RESERVED.
THIS DRAWING IS THE PROPERTY OF THE BABCOCK AND WILCOX COMPANY (B&W) AND ITS USE IS GOVERNED BY THE TERMS AND CONDITIONS OF THE CONTRACT FOR WHICH IT WAS CREATED. B&W GRANTS A NON-EXCLUSIVE LICENSE TO USE, REPRODUCE AND DISTRIBUTE THIS DRAWING SOLELY FOR THE MAINTENANCE, REPAIR AND OPERATION, AND FOR SOLICITING BIDS FOR THE ERECTION OF, THE EQUIPMENT DISCLOSED HEREIN.

PIPE SUPPORT DETAIL
RECIRCULATION PUMP SYSTEM
PS-1-790-003
UNIT 1

CITY OF HASTINGS
WHELAN ENERGY CENTER
BOTTOM ASH CONVEYOR SYSTEM MODIFICAITON
UNIT 1
HASTINGS, NEBRASKA

CUST. DWG.

SCALE 1:1
CONTRACT 225361-01
DWG 225361-01-PS790-003
REV B

225361-01-PS790-004

BILL OF MATERIAL

SHIP UNIT		MATERIAL						
QTY	MARK NO.	PIECE (x)	PIECE QTY	DESCRIPTION	FIG.	WIDTH	LENGTH	REMARKS
1	PS-1-790-004-1	1		SUPPORT WELDMENT		–	–	
		1a	1	PL. 3/8"		0'-6"	0'-10"	–
		1b	1	W6X12 (B)		–	0'-6 1/16"	–
2	PS-1-790-004-2	2		U-BOLT FOR 3" C.S. PIPE	ANVIL FIG. 137	–	–	

1. HARDWARE FIGURES ARE GIVEN AS REFERENCE ONLY. MAY USE EQUIVALENT FROM ANOTHER MANUFACTURER OR EQUIVALENT SHOP FABRICATION.

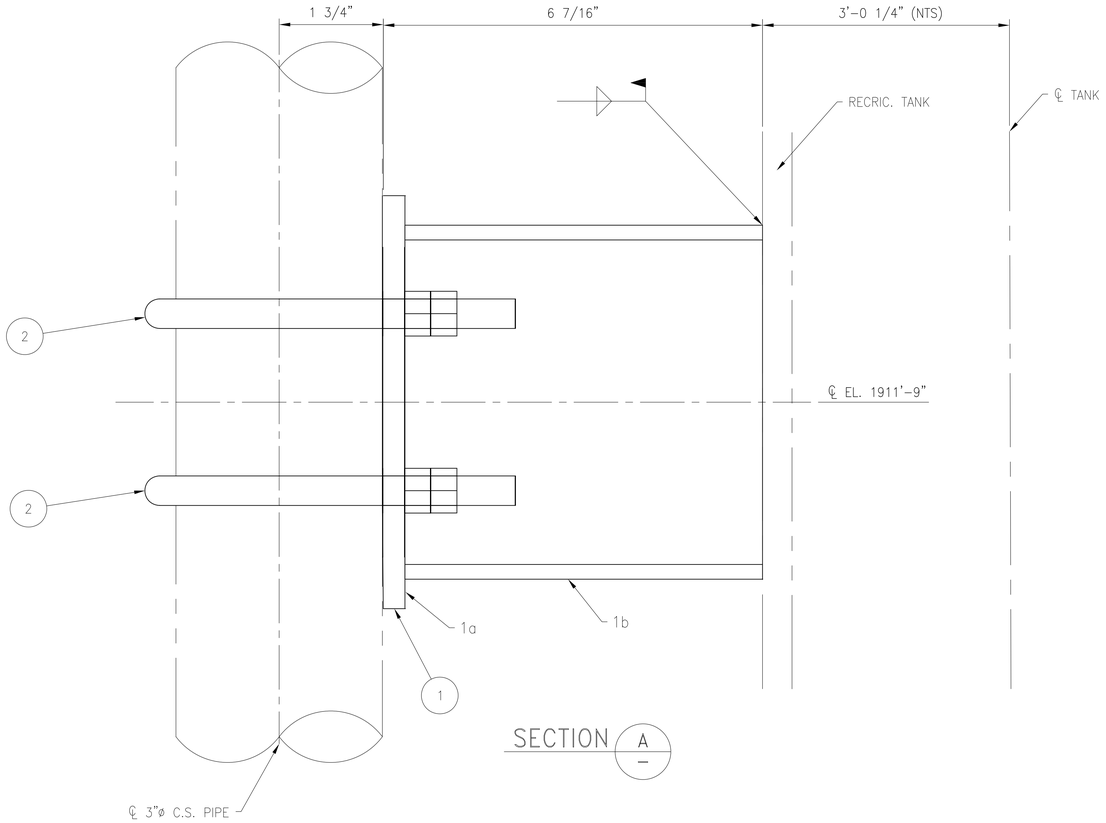

SECTION A/–

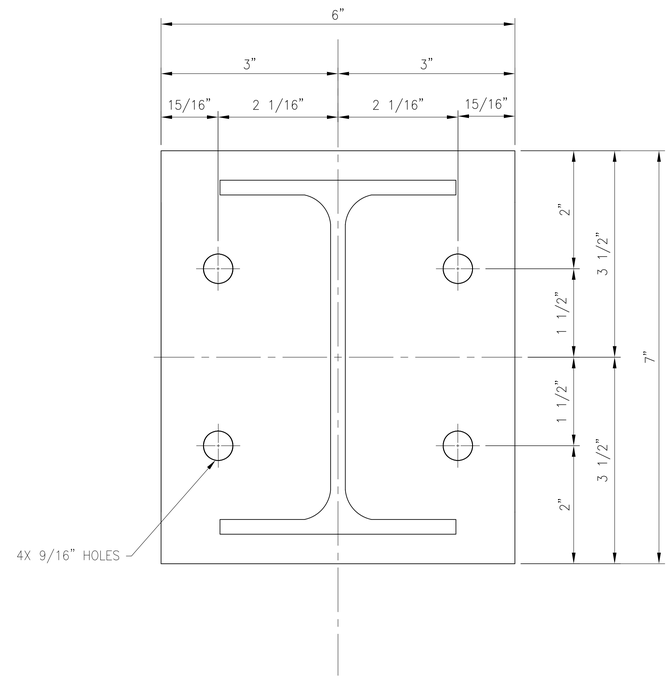

DETAIL 1a/–

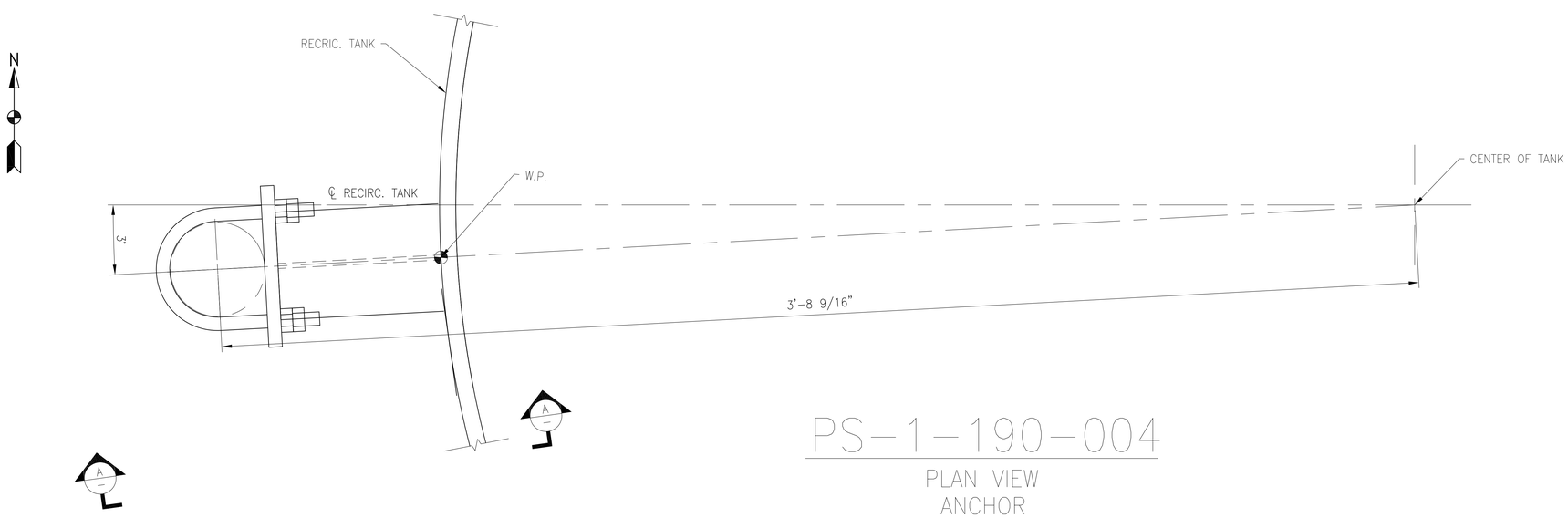

PS-1-190-004

PLAN VIEW
ANCHOR

PIPE SUPPORT LOCATION PLANS:	225361-01-E790-SERIES
PIPE SUPPORT DETAILS:	225361-01-PS790-SERIES
PIPE SUPPORT GENERAL NOTES:	225361-01-E189-SERIES
STRUCTURAL GENERAL NOTES:	225361-01-E145-SERIES

REVISIONS

REV.	DATE	REV. BY	CKD. BY	ENG. APP.	ENG. APP.	REVISION RECORD
B	12/11/25	JLZ	KBJ	KBJ		UPDATED PER CUSTOMER COMMENTS
A	11/20/25	JLZ	KBJ	KBJ		INITIAL ISSUE

DRAWN BY	JLZ	11/20/25
CHECKED BY	KBJ	11/20/25
MECH. APP.		
STRUCT. APP.	KBJ	11/20/25
ELECT. APP.		

Allen-Sherman-Hoff
The Babcock & Wilcox Company
Exton, Pennsylvania, U.S.A.

©2023 THE BABCOCK AND WILCOX COMPANY ALL RIGHTS RESERVED.
THIS DRAWING IS THE PROPERTY OF THE BABCOCK AND WILCOX COMPANY (B&W) AND ITS USE IS GOVERNED BY THE TERMS AND CONDITIONS OF THE CONTRACT FOR WHICH IT WAS CREATED. B&W GRANTS A NON-EXCLUSIVE LICENSE TO USE, REPRODUCE AND DISTRIBUTE THIS DRAWING SOLELY FOR THE MAINTENANCE, REPAIR AND OPERATION, AND FOR SOLICITING BIDS FOR THE ERECTION OF, THE EQUIPMENT DISCLOSED HEREIN.

PIPE SUPPORT DETAILS
RECIRCULATION PUMP SYSTEM
PS-1-790-004
UNIT 1

CITY OF HASTINGS
WHELAN ENERGY CENTER
BOTTOM ASH CONVEYOR SYSTEM MODIFICAITON
UNIT 1
HASTINGS, NEBRASKA

CUST. DWG.

SCALE 6"=1'-0"
CONTRACT 225361-01
DWG 225361-01-PS790-004
REV B

225361-01-PS790-005

BILL OF MATERIAL

SHIP UNIT		MATERIAL						
QTY	MARK NO.	PIECE (x)	PIECE QTY	DESCRIPTION	FIG.	WIDTH	LENGTH	REMARKS
1	PS-1-790-005-1	1		SUPPORT WELDMENT		–	–	
		1a	1	PL. 3/8"		0'-5"	0'-5"	–
		1b	2	PL. 3/8"		0'-3"	0'-5"	–
		1c	1	PL. 3/8"		0'-3 1/16"	0'-3 5/8"	–

1. HARDWARE FIGURES ARE GIVEN AS REFERENCE ONLY. MAY USE EQUIVALENT FROM ANOTHER MANUFACTURER OR EQUIVALENT SHOP FABRICATION.

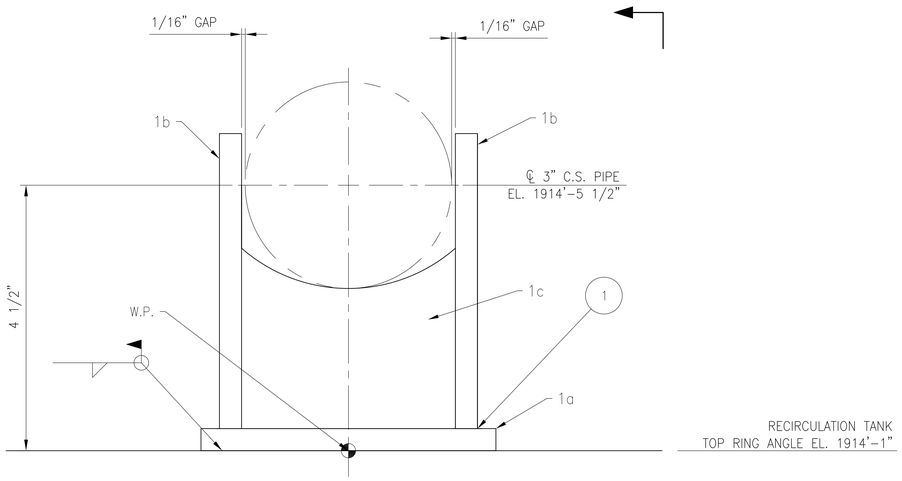

PS-1-790-005

LOOKING EAST
GUIDE

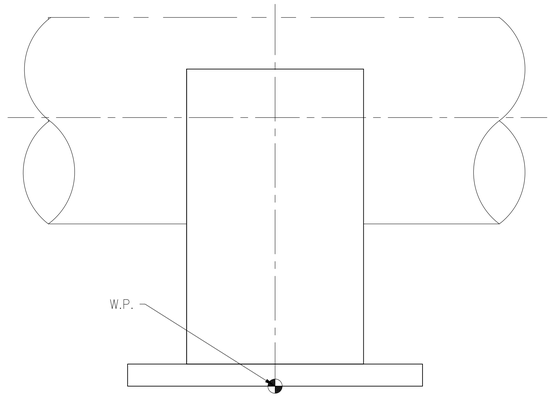

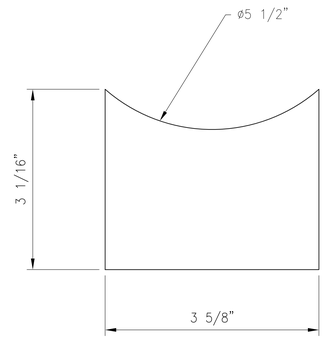

DETAIL 1c
–

PIPE SUPPORT LOCATION PLANS:	225361-01-E790-SERIES
PIPE SUPPORT DETAILS:	225361-01-PS790-SERIES
PIPE SUPPORT GENERAL NOTES:	225361-01-E189-SERIES
STRUCTURAL GENERAL NOTES:	225361-01-E145-SERIES

REVISIONS

REV.	DATE	REV. BY	CKD. BY	ENG. APP.	ENG. APP.	REVISION RECORD
A	11/20/25	JLZ	KBJ	KBJ		INITIAL ISSUE

DRAWN BY	JLZ	11/20/25
CHECKED BY	KBJ	11/20/25
MECH. APP.		
STRUCT. APP.	KBJ	11/20/25
ELECT. APP.		

Allen-Sherman-Hoff
The Babcock & Wilcox Company
Exton, Pennsylvania, U.S.A.

©2023 THE BABCOCK AND WILCOX COMPANY ALL RIGHTS RESERVED.
THIS DRAWING IS THE PROPERTY OF THE BABCOCK AND WILCOX COMPANY (B&W) AND ITS USE IS GOVERNED BY THE TERMS AND CONDITIONS OF THE CONTRACT FOR WHICH IT WAS CREATED. B&W GRANTS A NON-EXCLUSIVE LICENSE TO USE, REPRODUCE AND DISTRIBUTE THIS DRAWING SOLELY FOR THE MAINTENANCE, REPAIR AND OPERATION, AND FOR SOLICITING BIDS FOR THE ERECTION OF, THE EQUIPMENT DISCLOSED HEREIN.

PIPE SUPPORT DETAILS
RECIRCULATION PUMP SYSTEM
PS-1-790-005
UNIT 1

CITY OF HASTINGS
WHELAN ENERGY CENTER
BOTTOM ASH CONVEYOR SYSTEM MODIFICAITON
UNIT 1
HASTINGS, NEBRASKA

CUST. DWG.

SCALE 1:1
CONTRACT 225361-01
DWG 225361-01-PS790-005
REV A

225361-01-PS790-006

BILL OF MATERIAL

SHIP UNIT		MATERIAL						
QTY	MARK NO.	PIECE (x)	PIECE QTY	DESCRIPTION	FIG.	WIDTH	LENGTH	REMARKS
1	PS-1-790-006-1	1		SUPPORT WELMENT		–	–	
		1a	1	PL. 1/2"		0'-6"	1'-0"	–
		1b	1	4"ø SCH 40 C.S. PIPE W/ 1/4" VENT HOLE		–	0'-10 7/16"	–
1	PS-1-790-006-2	2		U-BOLT FOR 8"ø C.S. PIPE		–	–	

1. HARDWARE FIGURES ARE GIVEN AS REFERENCE ONLY. MAY USE EQUIVALENT FROM ANOTHER MANUFACTURER OR EQUIVALENT SHOP FABRICATION.

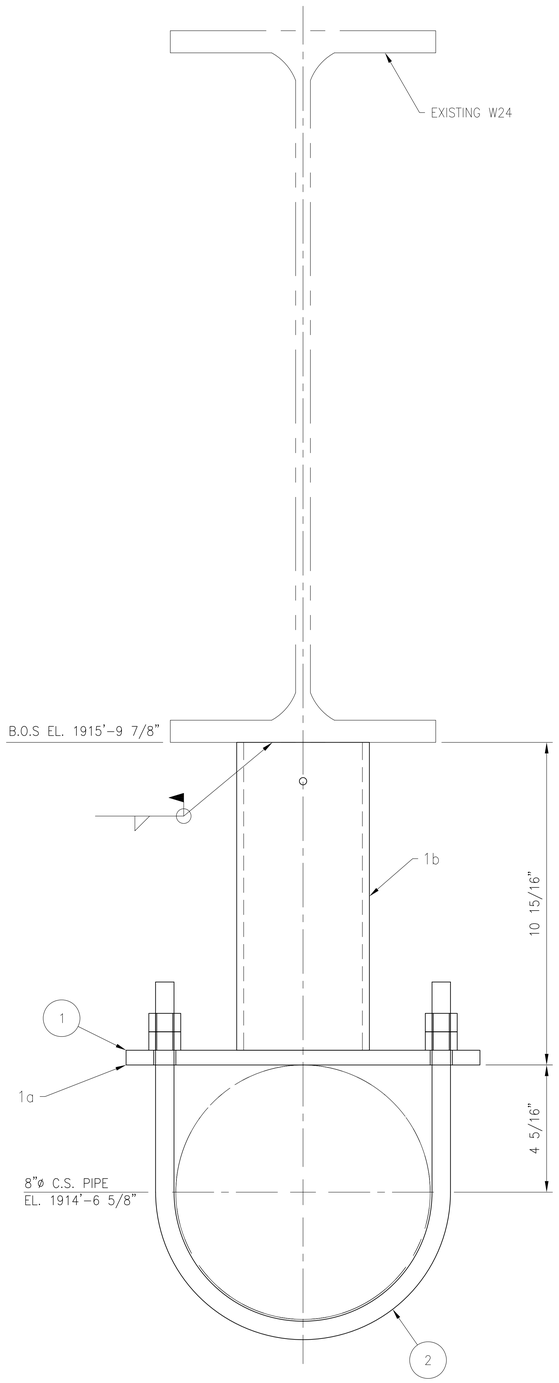

PS-1-790-006

LOOKING EAST
ANCHOR

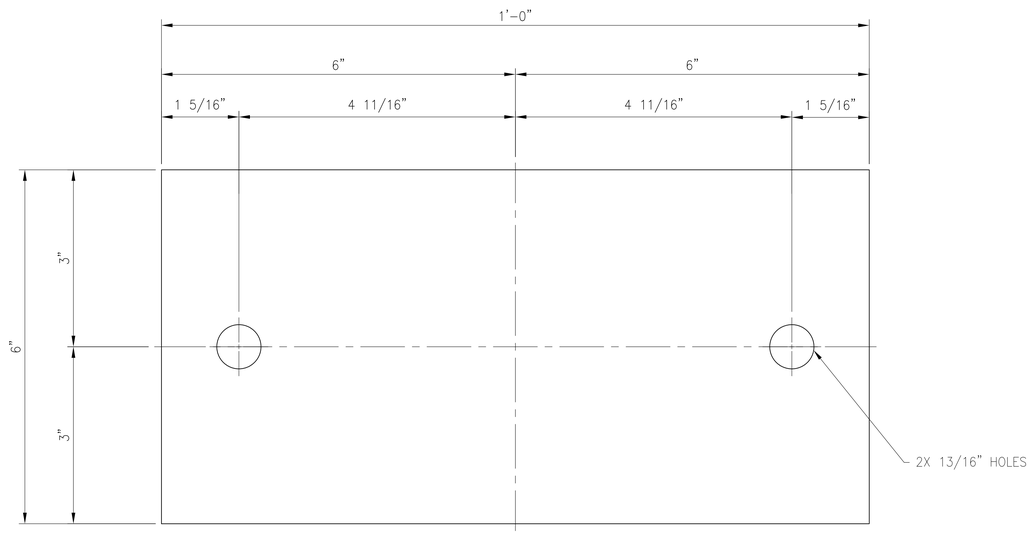

DETAIL 1a / –

PIPE SUPPORT LOCATION PLANS:	225361-01-E790-SERIES
PIPE SUPPORT DETAILS:	225361-01-PS790-SERIES
PIPE SUPPORT GENERAL NOTES:	225361-01-E189-SERIES
STRUCTURAL GENERAL NOTES:	225361-01-E145-SERIES

REVISIONS

REV.	DATE	REV. BY	CKD. BY	ENG. APP.	ENG. APP.	REVISION RECORD
A	11/20/25	JLZ	KBJ	KBJ		INITIAL ISSUE

DRAWN BY	JLZ	11/20/25
CHECKED BY	KBJ	11/20/25
MECH. APP.		
STRUCT. APP.	KBJ	11/20/25
ELECT. APP.		

Allen-Sherman-Hoff
The Babcock & Wilcox Company
Exton, Pennsylvania, U.S.A.

©2023 THE BABCOCK AND WILCOX COMPANY ALL RIGHTS RESERVED.
THIS DRAWING IS THE PROPERTY OF THE BABCOCK AND WILCOX COMPANY (B&W) AND ITS USE IS GOVERNED BY THE TERMS AND CONDITIONS OF THE CONTRACT FOR WHICH IT WAS CREATED. B&W GRANTS A NON-EXCLUSIVE LICENSE TO USE, REPRODUCE AND DISTRIBUTE THIS DRAWING SOLELY FOR THE MAINTENANCE, REPAIR AND OPERATION, AND FOR SOLICITING BIDS FOR THE ERECTION OF, THE EQUIPMENT DISCLOSED HEREIN.

PIPE SUPPORT DETAILS
RECIRCULATION PUMP SYSTEM
PS-1-790-006
UNIT 1

CITY OF HASTINGS
WHELAN ENERGY CENTER
BOTTOM ASH CONVEYOR SYSTEM MODIFICAITON
UNIT 1
HASTINGS, NEBRASKA

CUST. DWG.

SCALE 6" = 1'-0"
CONTRACT 225361-01
DWG 225361-01-PS790-006
REV A

225361-01-PS790-007

BILL OF MATERIAL

SHIP UNIT		MATERIAL						
QTY	MARK NO.	PIECE (x)	PIECE QTY	DESCRIPTION	FIG.	WIDTH	LENGTH	REMARKS
1	PS-1-790-007-1	1		SUPPORT WELDMENT		–	–	
		1a	1	PL. 3/8"		0'-11"	0'-5"	–
		1b	2	PL. 3/8"		0'-3"	0'-6"	–
		1c	1	PL. 3/8"		0'-3 1/4"	0'-8 3/4"	–

1. HARDWARE FIGURES ARE GIVEN AS REFERENCE ONLY. MAY USE EQUIVALENT FROM ANOTHER MANUFACTURER OR EQUIVALENT SHOP FABRICATION.

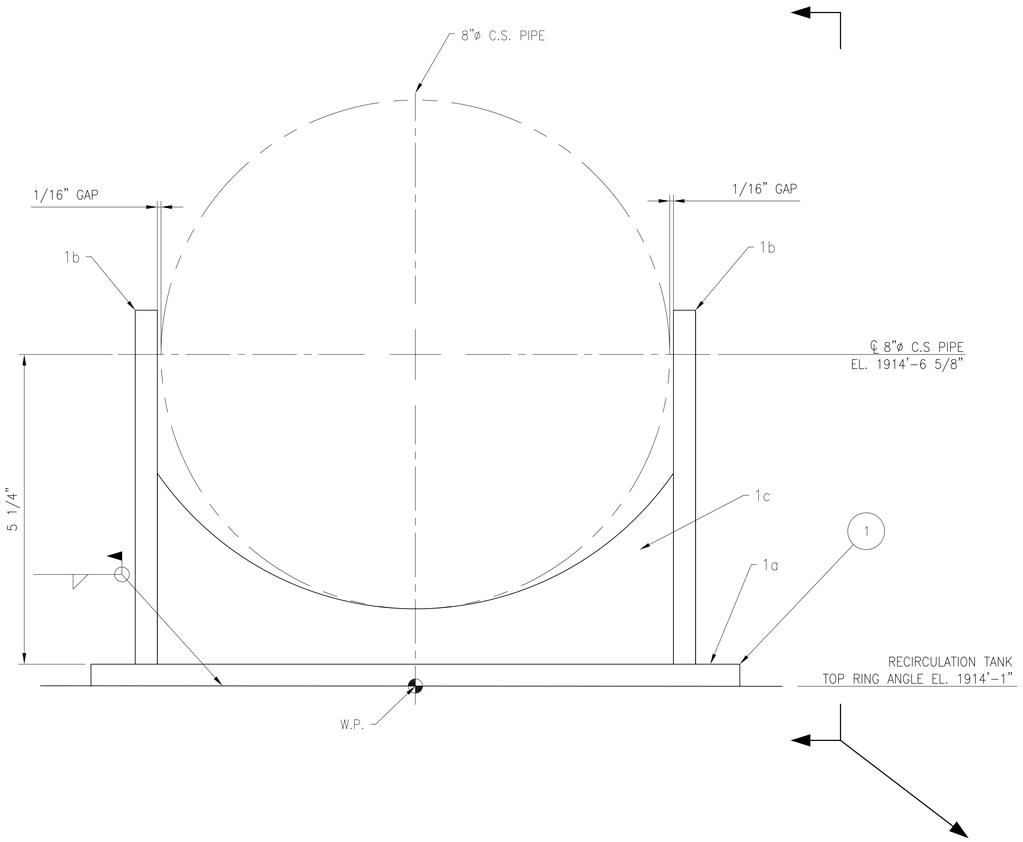

PS-1-790-007

LOOKING EAST
GUIDE

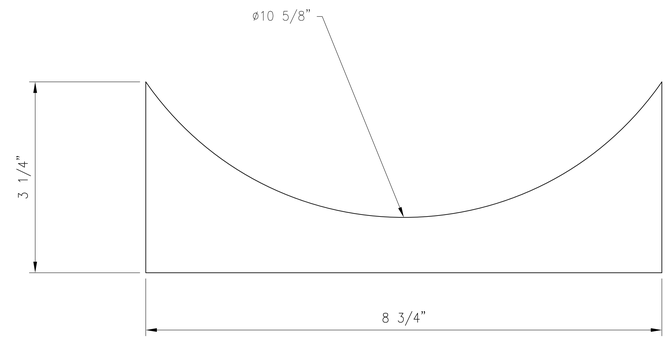

DETAIL 1c / –

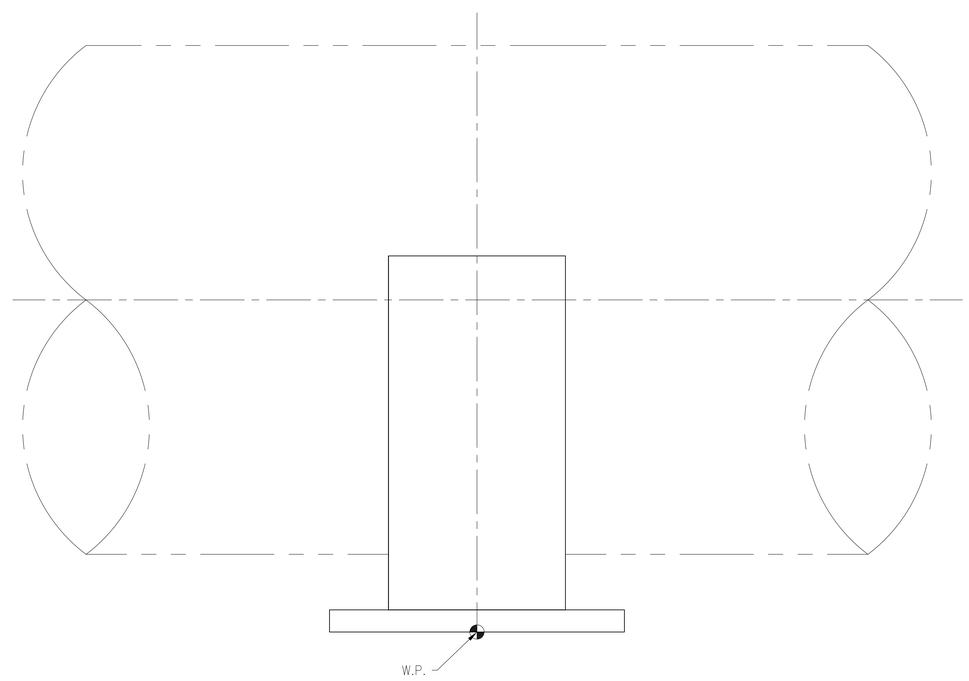

PIPE SUPPORT LOCATION PLANS:	225361-01-E790-SERIES
PIPE SUPPORT DETAILS:	225361-01-PS790-SERIES
PIPE SUPPORT GENERAL NOTES:	225361-01-E189-SERIES
STRUCTURAL GENERAL NOTES:	225361-01-E145-SERIES

REVISIONS

REV.	DATE	REV. BY	CKD. BY	ENG. APP.	ENG. APP.	REVISION RECORD
A	11/20/25	JLZ	KBJ	KBJ		INITIAL ISSUE

DRAWN BY	JLZ	11/20/25
CHECKED BY	KBJ	11/20/25
MECH. APP.		
STRUCT. APP.	KBJ	11/20/25
ELECT. APP.		

Allen-Sherman-Hoff
The Babcock & Wilcox Company
Exton, Pennsylvania, U.S.A.

©2023 THE BABCOCK AND WILCOX COMPANY ALL RIGHTS RESERVED.
THIS DRAWING IS THE PROPERTY OF THE BABCOCK AND WILCOX COMPANY (B&W) AND ITS USE IS GOVERNED BY THE TERMS AND CONDITIONS OF THE CONTRACT FOR WHICH IT WAS CREATED. B&W GRANTS A NON-EXCLUSIVE LICENSE TO USE, REPRODUCE AND DISTRIBUTE THIS DRAWING SOLELY FOR THE MAINTENANCE, REPAIR AND OPERATION, AND FOR SOLICITING BIDS FOR THE ERECTION OF, THE EQUIPMENT DISCLOSED HEREIN.

PIPE SUPPORT DETAILS
RECIRCULATION PUMP SYSTEM
PS-1-790-007
UNIT 1

CITY OF HASTINGS
WHELAN ENERGY CENTER
BOTTOM ASH CONVEYOR SYSTEM MODIFICAITON
UNIT 1
HASTINGS, NEBRASKA

CUST. DWG.

SCALE 1:1
CONTRACT 225361-01
DWG 225361-01-PS790-007
REV A

225361-01-PS790-008

BILL OF MATERIAL

SHIP UNIT		MATERIAL						
QTY	MARK NO.	PIECE (x)	PIECE QTY	DESCRIPTION	FIG.	WIDTH	LENGTH	REMARKS
1	PS-1-790-008-1	1		U-BOLT FOR 6"ø C.S. PIPE		–	–	
1	PS-1-790-008-2	2		SUPPORT WELDMENT		–	–	
		2a	1	PL. 1/2"		0'-4"	0'-10"	–
		2b	1	3"ø SCH 40 PIPE W 1/4" VENT HOLE		–	0'-3 15/16"	–
		2c	1	PL. 1/4"		0'-4 1/2"	0'-4 1/2"	–

1. HARDWARE FIGURES ARE GIVEN AS REFERENCE ONLY. MAY USE EQUIVALENT FROM ANOTHER MANUFACTURER OR EQUIVALENT SHOP FABRICATION.

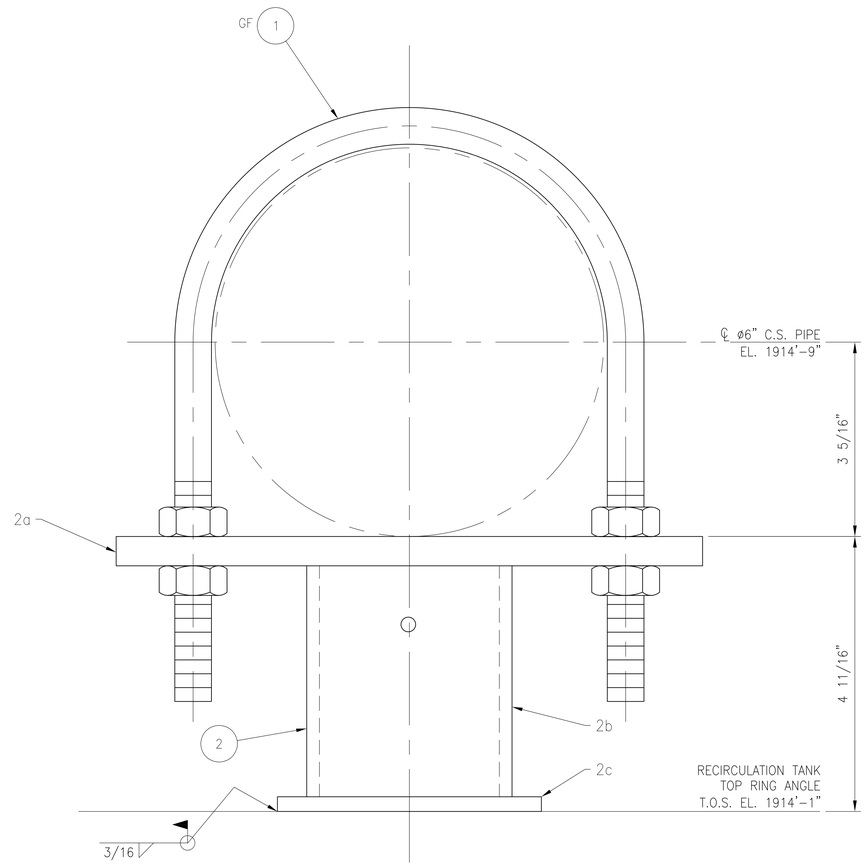

PS-1-790-008

LOOKING NORTH
GUIDE

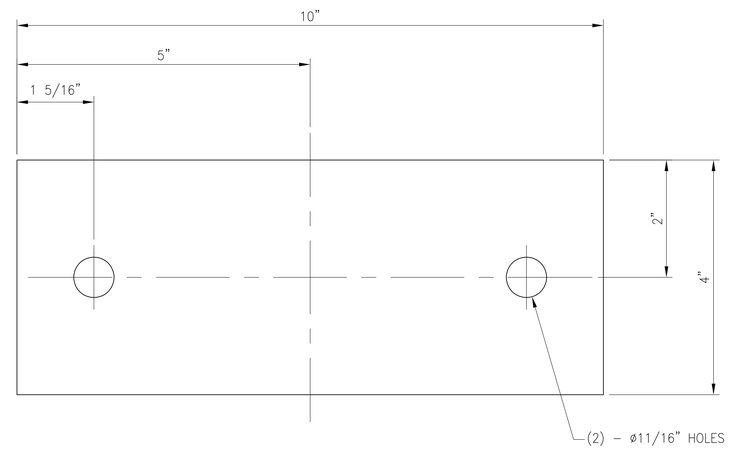

DETAIL 2a / –

PIPE SUPPORT LOCATION PLANS:	225361-01-E790-SERIES
PIPE SUPPORT DETAILS:	225361-01-PS790-SERIES
PIPE SUPPORT GENERAL NOTES:	225361-01-E189-SERIES
STRUCTURAL GENERAL NOTES:	225361-01-E145-SERIES

REVISIONS

REV.	DATE	REV. BY	CKD. BY	ENG. APP.	ENG. APP.	REVISION RECORD
A	11/20/25	JT	KBJ	KBJ		INITIAL ISSUE

DRAWN BY	JT	11/20/25
CHECKED BY	KBJ	11/20/25
MECH. APP.		
STRUCT. APP.	KBJ	11/20/25
ELECT. APP.		

Allen-Sherman-Hoff
The Babcock & Wilcox Company
Exton, Pennsylvania, U.S.A.

©2023 THE BABCOCK AND WILCOX COMPANY ALL RIGHTS RESERVED.
THIS DRAWING IS THE PROPERTY OF THE BABCOCK AND WILCOX COMPANY (B&W) AND ITS USE IS GOVERNED BY THE TERMS AND CONDITIONS OF THE CONTRACT FOR WHICH IT WAS CREATED. B&W GRANTS A NON-EXCLUSIVE LICENSE TO USE, REPRODUCE AND DISTRIBUTE THIS DRAWING SOLELY FOR THE MAINTENANCE, REPAIR AND OPERATION, AND FOR SOLICITING BIDS FOR THE ERECTION OF, THE EQUIPMENT DISCLOSED HEREIN.

PIPE SUPPORT DETAILS
RECIRCULATION PUMP SYSTEM
PS-1-790-008
UNIT 1

CITY OF HASTINGS
WHELAN ENERGY CENTER
BOTTOM ASH CONVEYOR SYSTEM MODIFICAITON
UNIT 1
HASTINGS, NEBRASKA

CUST. DWG.

SCALE 1:1
CONTRACT 225361-01
DWG 225361-01-PS790-008
REV A

225361-01-PS790-009

BILL OF MATERIAL

SHIP UNIT		MATERIAL						
QTY	MARK NO.	PIECE (x)	PIECE QTY	DESCRIPTION	FIG.	WIDTH	LENGTH	REMARKS
2	PS-1-790-009-1	1		U-BOLT FOR 6"ø C.S. PIPE		–	–	
1	PS-1-790-009-2	2		SUPPORT WELDMENT		–	–	
		2a	1	PL. 1/2"		0'-8"	0'-10"	–
		2b	1	4"ø SCH 40 PIPE W 1/4" VENT HOLE		–	8'-9 11/16"	–

1. HARDWARE FIGURES ARE GIVEN AS REFERENCE ONLY. MAY USE EQUIVALENT FROM ANOTHER MANUFACTURER OR EQUIVALENT SHOP FABRICATION.

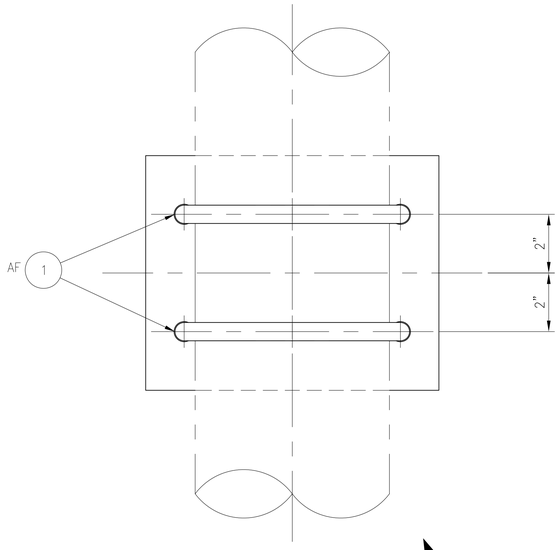

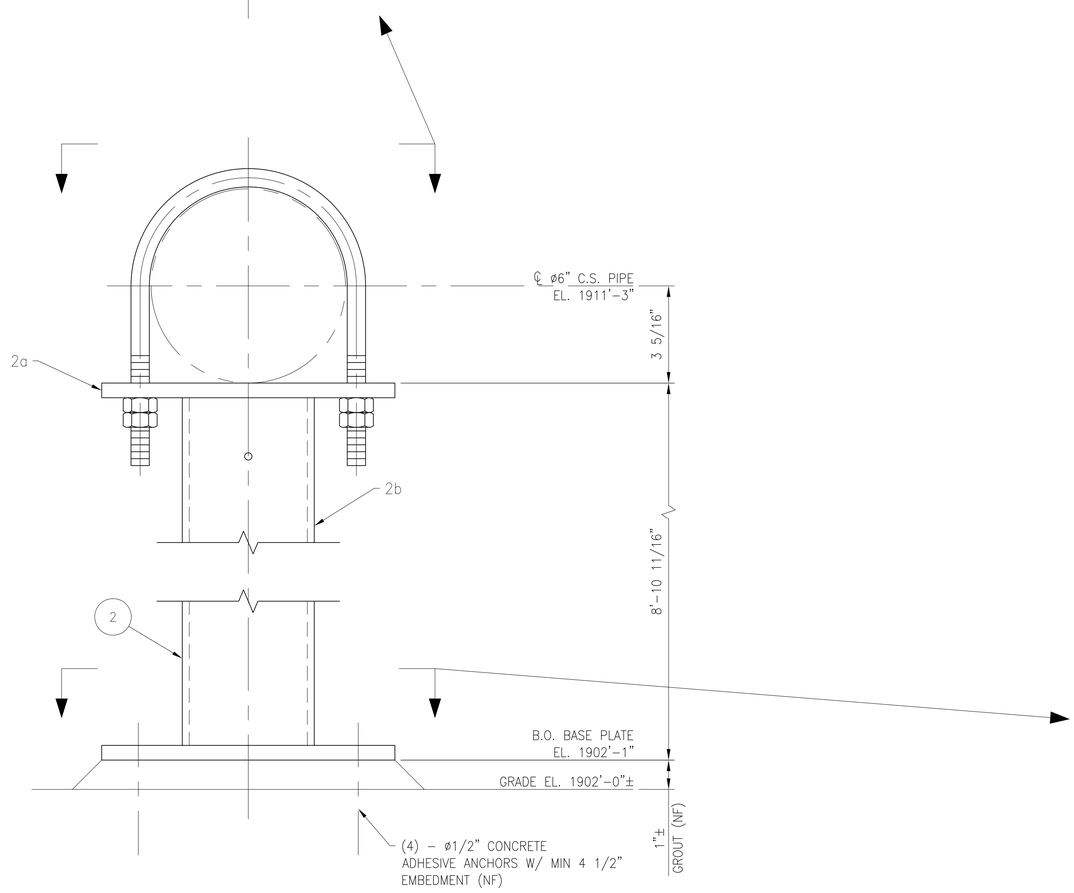

PS-1-790-009

LOOKING NORTH
ANCHOR

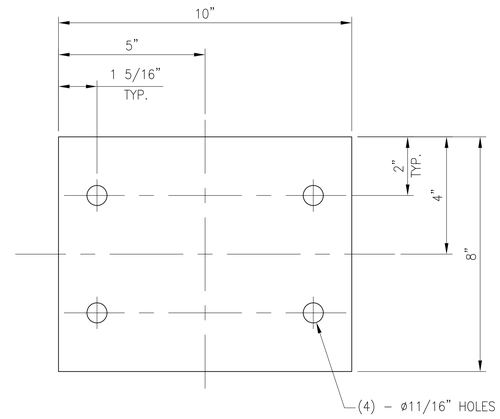

DETAIL 2a / –

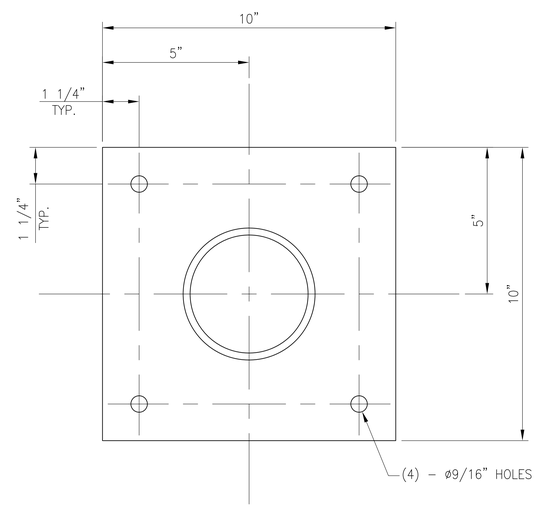

PIPE SUPPORT LOCATION PLANS:	225361-01-E790-SERIES
PIPE SUPPORT DETAILS:	225361-01-PS790-SERIES
PIPE SUPPORT GENERAL NOTES:	225361-01-E189-SERIES
STRUCTURAL GENERAL NOTES:	225361-01-E145-SERIES

REVISIONS

REV.	DATE	REV. BY	CKD. BY	ENG. APP.	ENG. APP.	REVISION RECORD
A	11/20/25	JT	KBJ	KBJ		INITIAL ISSUE

DRAWN BY	JT	11/20/25
CHECKED BY	KBJ	11/20/25
MECH. APP.		
STRUCT. APP.	KBJ	11/20/25
ELECT. APP.		

Allen-Sherman-Hoff
The Babcock & Wilcox Company
Exton, Pennsylvania, U.S.A.

©2023 THE BABCOCK AND WILCOX COMPANY ALL RIGHTS RESERVED.
THIS DRAWING IS THE PROPERTY OF THE BABCOCK AND WILCOX COMPANY (B&W) AND ITS USE IS GOVERNED BY THE TERMS AND CONDITIONS OF THE CONTRACT FOR WHICH IT WAS CREATED. B&W GRANTS A NON-EXCLUSIVE LICENSE TO USE, REPRODUCE AND DISTRIBUTE THIS DRAWING SOLELY FOR THE MAINTENANCE, REPAIR AND OPERATION, AND FOR SOLICITING BIDS FOR THE ERECTION OF, THE EQUIPMENT DISCLOSED HEREIN.

PIPE SUPPORT DETAILS
RECIRCULATION PUMP SYSTEM
PS-1-790-009
UNIT 1

CITY OF HASTINGS
WHELAN ENERGY CENTER
BOTTOM ASH CONVEYOR SYSTEM MODIFICAITON
UNIT 1
HASTINGS, NEBRASKA

CUST. DWG.

SCALE 6"=1'-0"
CONTRACT 225361-01
DWG 225361-01-PS790-009
REV A

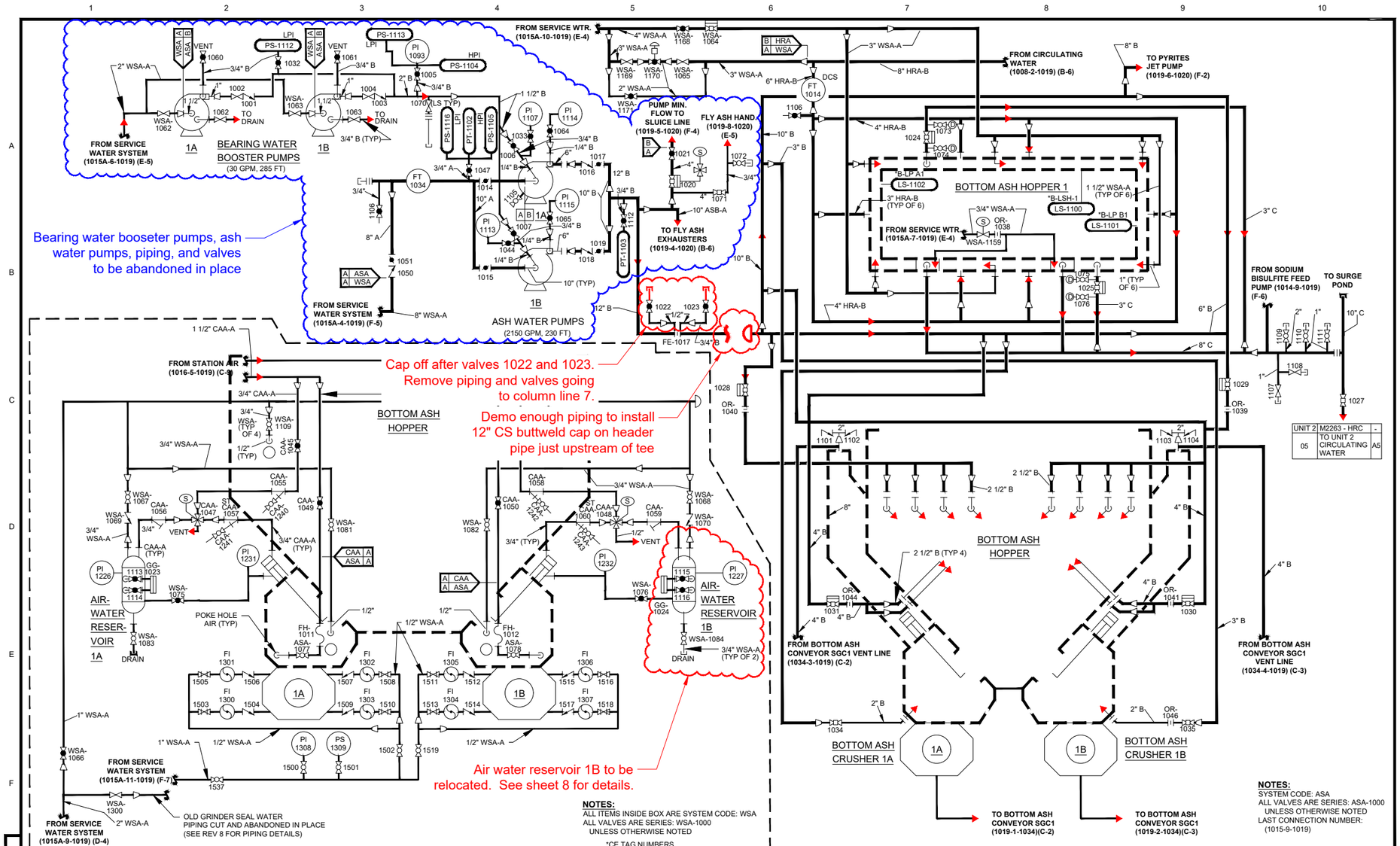

NO	DATE	REVISIONS	DWN	CK	ACC	APP
9	5/9/24	UPDATED FOR BOTTOM ASH CONVEYORS	BM	AB		
8	3/16/20	UPDATED FOR REMOVED VALVES	BT			
7	6/22/18	OPERATIONS VERIFICATIONS 2018	EK	MM		
6	10/30/15	REVIEWED AND VERIFIED	EK	TQ		CW
5	11/19/13	REVISED	EK	DZ		
4	12-9-05	AUTOCAD FORMAT	JES		KWL	
3	9/15/81	CONFORMED TO CONST RECORDS	AGG		ALC	CJS
2	9/28/79	REVISED AS CIRCLED	AGG		ALC	CJS
1	2/23/79	ISSUE FOR CONSTRUCTION	AGG		ALC	CJS
0	12/15/78	BID 72.0000	AGG		ALC	

A-G NO. BE0411

I HEREBY CERTIFY THAT THIS DOCUMENT WAS PREPARED BY ME OR UNDER MY DIRECT SUPERVISION AND THAT I AM DULY REGISTERED PROFESSIONAL ENGINEER UNDER THE LAWS OF THE STATE OF NEBRASKA.
SIGNED H.C. TEMME
DATE 2-23-79 REG. NO. E-2965

BLACK & VEATCH CONSULTING ENGINEERS
PROJECT 7677

CITY OF HASTINGS, NEBRASKA
WHELAN ENERGY CENTER UNIT 1
PIPING AND INSTRUMENT DIAGRAM
BOTTOM ASH HANDLING

B&V DWG NO. M1019 REV. 9

No.	Revision	By	Date

HASTINGS UTILITIES

CITY OF HASTINGS ENGINEERING DEPT.

SCALE: N.T.S. | CONTRACTOR - | DRN. BY. BWM
DATE: 1/5/26 | APPRD. BY. -

WEC1 BOTTOM ASH RECIRC SYSTEM

DEMOLITION PLAN

DRG. NO. PT-335-07

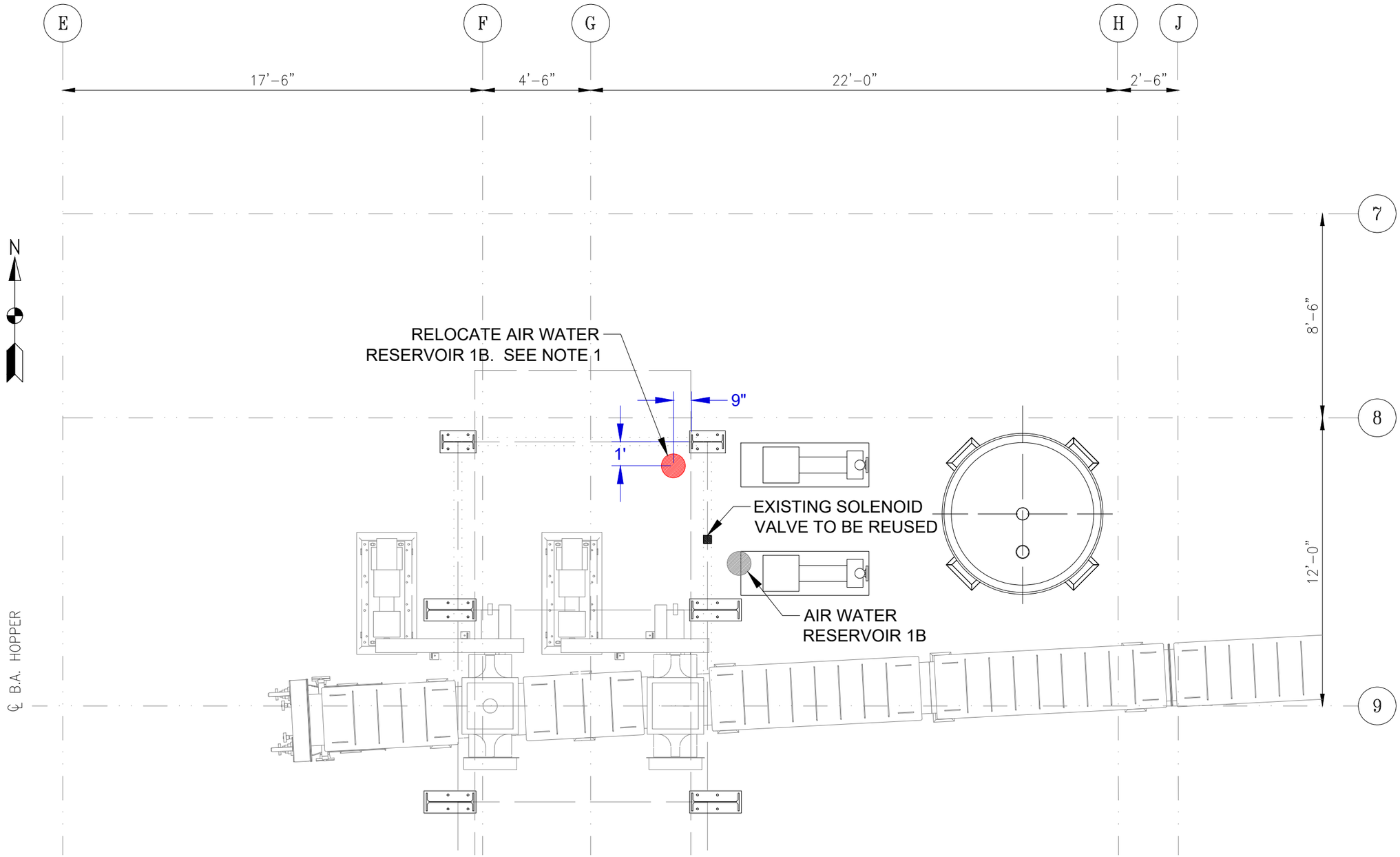

NOTES:
1.) FIELD ROUTE NEW COMPRESSED AIR AND SERVICE WATER PIPING FROM EXISTING FITTINGS TO NEW AIR/WATER RESERVOIR LOCATION.
2.) COMPRESSED AIR PIPING - 3/4" ASTM A53 GR. B SCH 80
3.) SERVICE WATER PIPING - 3/4" ASTM A53 GR. B SCH 80

No.	Revision	By	Date

HASTINGS UTILITIES

CITY OF HASTINGS ENGINEERING DEPT.

SCALE: N.T.S.	CONTRACTOR -	DRN. BY. BWM
DATE: 1/6/26		APPRD. BY. -

WEC1 BOTTOM ASH RECIRC SYSTEM

AIR WATER RESERVOIR 1B RELOCATION

DRG. NO. PT-335-08

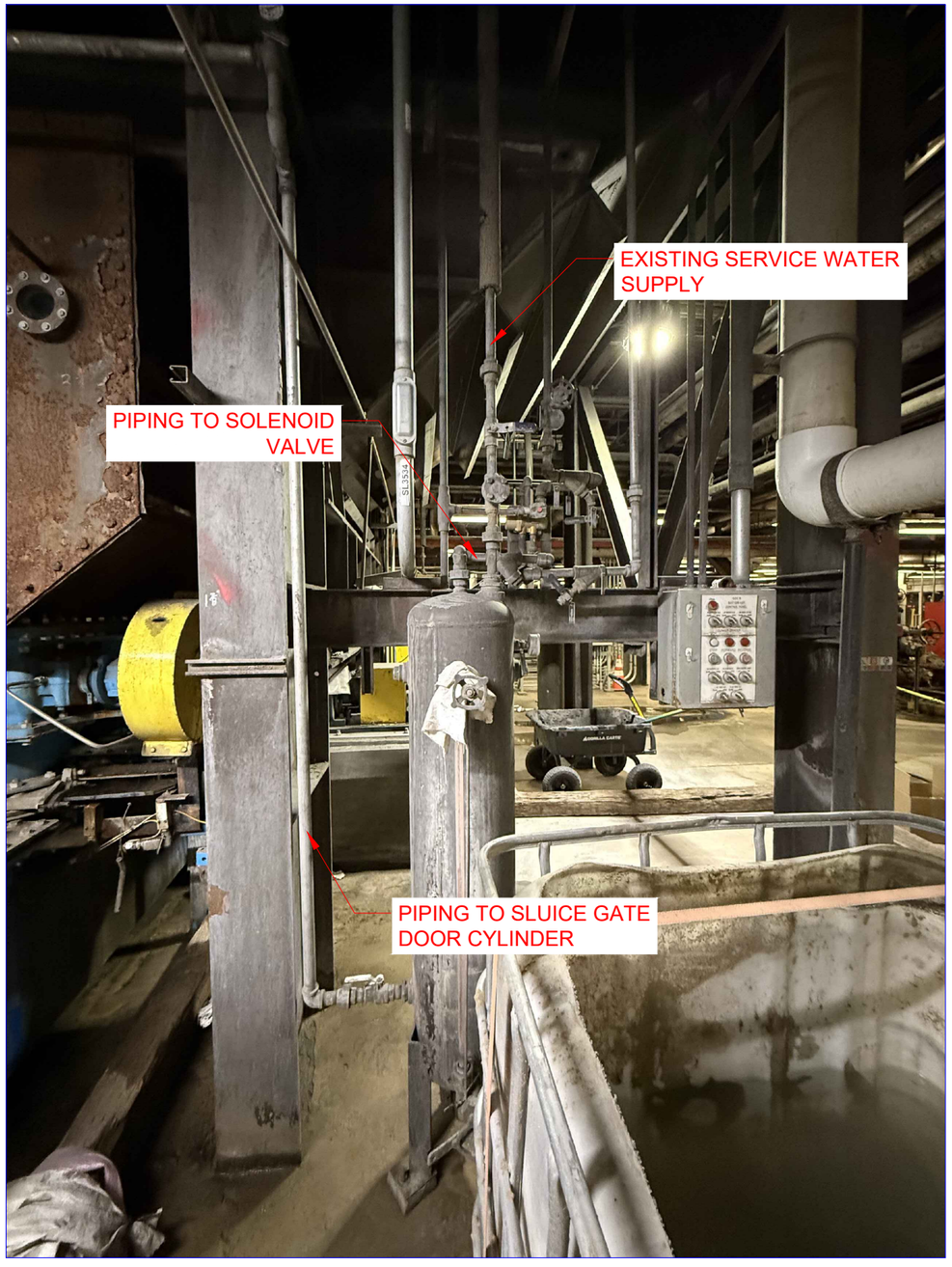

NOTES:
1.) FIELD ROUTE NEW COMPRESSED AIR AND SERVICE WATER PIPING FROM EXISTING FITTINGS TO NEW AIR/WATER RESERVOIR LOCATION.
2.) COMPRESSED AIR PIPING - 3/4" ASTM A53 GR. B SCH 80
3.) SERVICE WATER PIPING - 3/4" ASTM A53 GR. B SCH 80

No.	Revision	By	Date

HASTINGS UTILITIES

CITY OF HASTINGS ENGINEERING DEPT.

SCALE: N.T.S.	CONTRACTOR -	DRN. BY. BWM
DATE: 1/6/26		APPRD. BY. -

WEC1 BOTTOM ASH RECIRC SYSTEM

AIR WATER RESERVOIR 1B RELOCATION

DRG. NO. PT-335-09

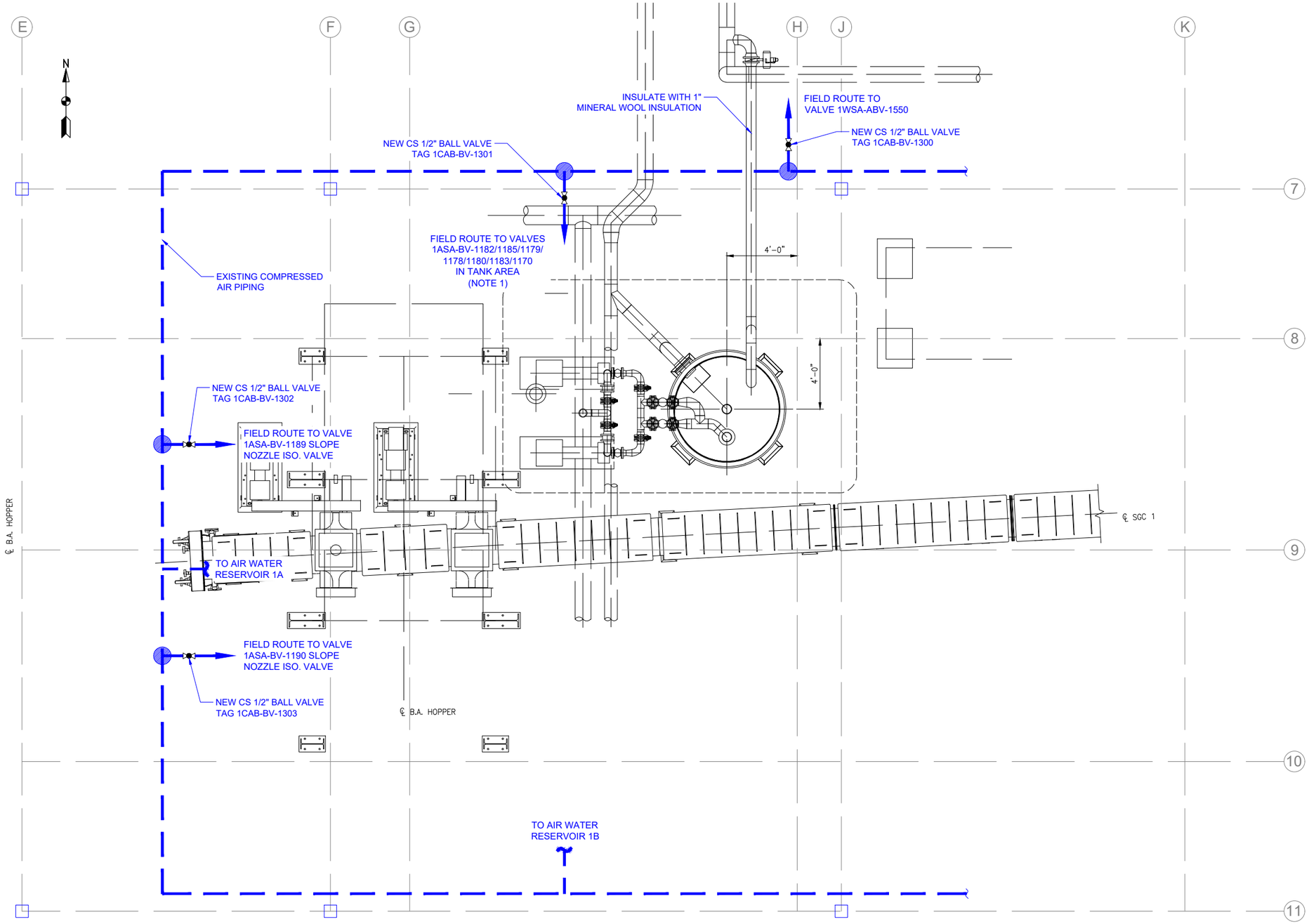

NOTES:

1.) DRAWING NOT TO SCALE. TIE-IN LOCATIONS TO BE DETERMINED BY CONTRACTOR.

2.) CONTRACTOR TO FIELD ROUTE COMPRESSED AIR PIPING TO VALVES/AREAS SHOWN ON DRAWING. EACH BRANCH LINE TO HAVE ISOLATION VALVE. EACH LINE TO INDIVIDUAL SOLENOID VALVES TO HAVE ISOLATION VALVE, SEE DRAWING PT-335-11 AND PT-335-12.

3.) COMPRESSED AIR PIPING - ASTM A53 GR. B SCH 80

No.	Revision	By	Date

HASTINGS UTILITIES

CITY OF HASTINGS ENGINEERING DEPT.

SCALE: N.T.S.	CONTRACTOR -	DRN. BY. BWM
DATE: 1/16/26		APPRD. BY. -

WEC1 BOTTOM ASH RECIRC SYSTEM

COMPRESSED AIR SYSTEM

DRG. NO. PT-335-10

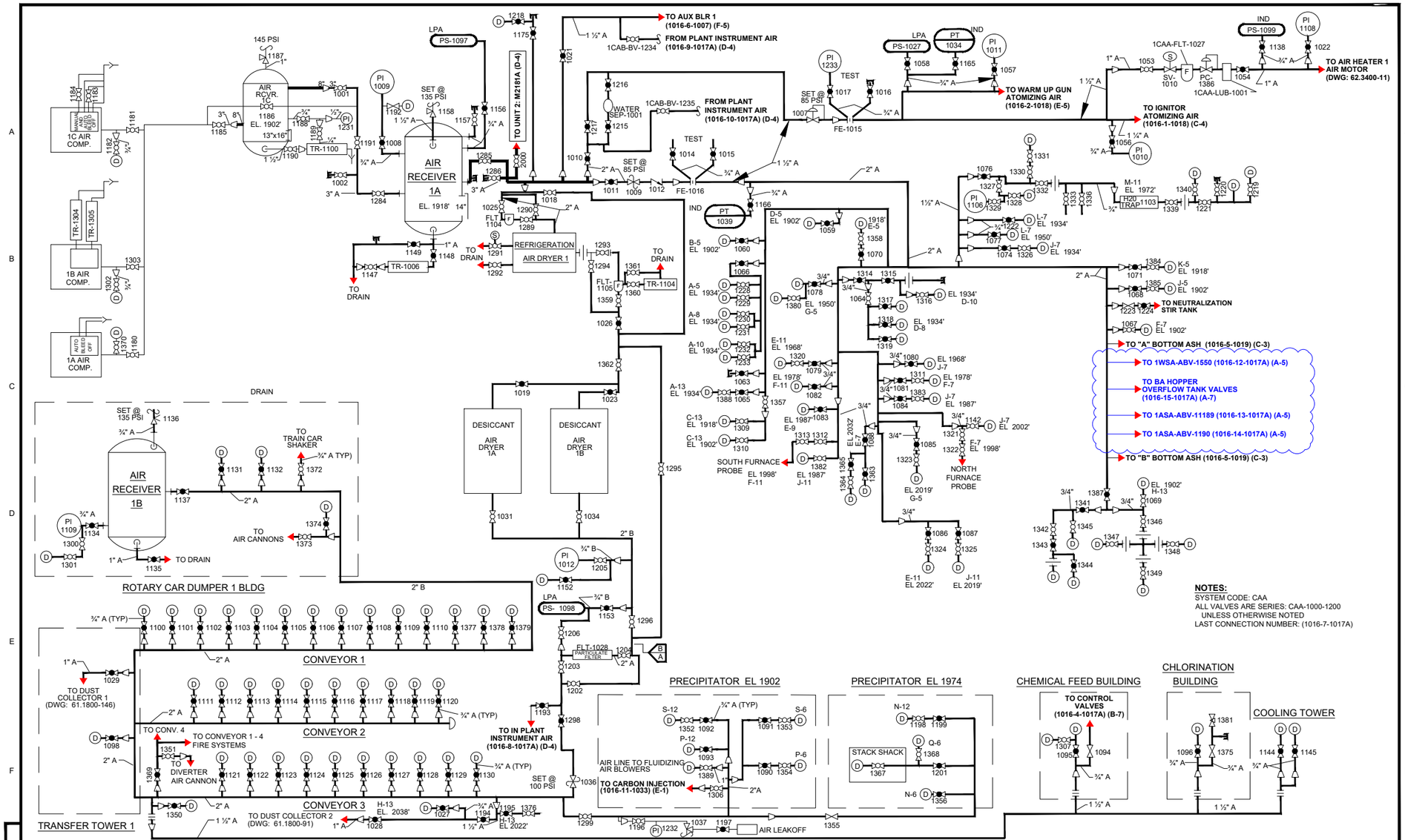

NO	DATE	REVISIONS	DWN	CK	APP	NO	DATE	REVISIONS	DWN	CK	ACC	APP	NO	DATE	REVISIONS	DWN	CK	ACC	APP
10	10/5/22	SORBENT INJ. CHANGED TO CARBON	BM			7	7/14/17	REVIEWED AND VERIFIED	TA		CW		3	9/15/81	CONFORMED TO CONST RECORDS	AGG		ALC	CJS
9	1/28/21	ADDED VALVES 1CAB-BV-1234 & 1235	BT			6	1/10/06	AUTOCAD FORMAT	JES		KWL		2	9/28/79	REVISED AS CIRCLED	AGG		ALC	CJS
8	1/8/19	Operations Verifications 2018	EK	AB		5	4/12/82	INSTRUMENT REVISIONS	CWH		KWL	MHS	1	2/23/79	ISSUE FOR CONSTRUCTION	AGG		ALC	CJS
						4	3/3/82	AIR CONTROL PIPONG FOR AC	C.H.		KWL	MHS	0	12/15/78	BID 72.0000	AGG		ALC	

A-G NO. BE0401

I HEREBY CERTIFY THAT THIS DOCUMENT WAS PREPARED BY ME OR UNDER MY DIRECT SUPERVISION AND THAT I AM DULY REGISTERED PROFESSIONAL ENGINEER UNDER THE LAWS OF THE STATE OF NEBRASKA.

SIGNED H.C. TEMME
DATE 2-23-79 REG. NO. E-2965

BLACK & VEATCH CONSULTING ENGINEERS
PROJECT 7677

CITY OF HASTINGS, NEBRASKA
WHELAN ENERGY CENTER UNIT 1

PIPING AND INSTRUMENT DIAGRAM
STATION AIR

B&V DWG NO. M1016
REV. 10

NOTES:
1.) SEE DRAWING PT-335-10 FOR PIPING DETAILS.
2.) CLOUD INDICATES NEW PIPING, VALVES, & EQUIPMENT.

No.	Revision	By	Date

HASTINGS UTILITIES

CITY OF HASTINGS ENGINEERING DEPT.

SCALE: N.T.S. | CONTRACTOR - | DRN. BY. BWM
DATE: 1/16/26 | APPRD. BY. -

WEC1 BOTTOM ASH RECIRC SYSTEM

P&ID M1016
NEW CONSTRUCTION

DRG. NO. PT-335-11

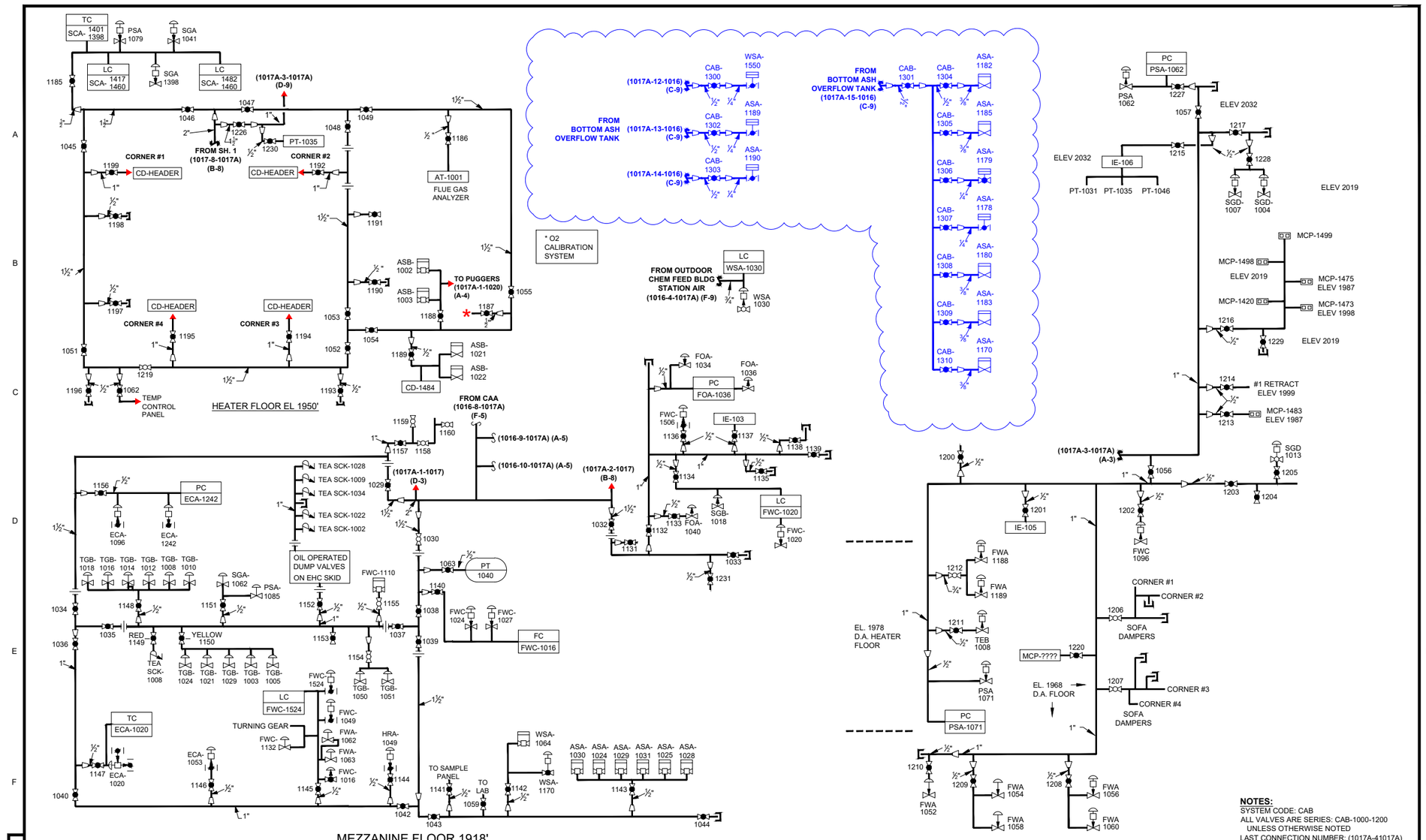

NOTES:
SYSTEM CODE: CAB
ALL VALVES ARE SERIES: CAB-1000-1200
UNLESS OTHERWISE NOTED
LAST CONNECTION NUMBER: (1017A-41017A)

NO	DATE	REVISIONS	DWN	CK	ACC	APP	NO	DATE	REVISIONS	DWN	CK	ACC	APP	NO	DATE	REVISIONS	DWN	CK	ACC	APP
							7	6/22/18	OPERATIONS VERIFICATIONS 2018	EK	AC			3	9/15/81	CONFORMED TO CONST. RECORDS	AGG		RTT	CJS
							6	8/22/17	Rearranged & added CAB-BV-1226	TA	TA		CW	2	9/28/79	REVISED AS CIRCLED	AGG		RTT	CJS
							5	2/16/17	Reviewed & Verified	EK	SR		CW	1	2/23/79	ISSUE FOR CONSTRUCTION	AGG		RTT	CJS
8	1/28/21	ADDED CONNECTIONS TO CAA P&ID	BT				4	12/27/16	P&ID Update	EK	SR		CW	0	12/15/78	BID 72.0000				

I HEREBY CERTIFY THAT THIS DOCUMENT WAS PREPARED BY ME OR UNDER MY DIRECT SUPERVISION AND THAT I AM DULY REGISTERED PROFESSIONAL ENGINEER UNDER THE LAWS OF THE STATE OF NEBRASKA.
SIGNED H.C. TEMME
DATE 2-23-79 REG. NO. E-2965

BLACK & VEATCH CONSULTING ENGINEERS
PROJECT 7677

CITY OF HASTINGS, NEBRASKA
WHELAN ENERGY CENTER UNIT 1
PIPING AND INSTRUMENT DIAGRAM
INSTRUMENT AIR SHEET 2

B&V DWG NO. M1017A
REV. 8

NOTES:
1.) SEE DRAWING PT-335-10 FOR PIPING DETAILS.
2.) CLOUD INDICATES NEW PIPING, VALVES, & EQUIPMENT.

No.	Revision	By	Date

HASTINGS UTILITIES

CITY OF HASTINGS ENGINEERING DEPT.

SCALE: N.T.S.	CONTRACTOR -	DRN. BY.	BWM
DATE: 1/16/26		APPRD. BY.	-

WEC1 BOTTOM ASH RECIRC SYSTEM

P&ID M1017A
NEW CONSTRUCTION

DRG. NO. PT-335-12

Section 21B - PIPELINE LISTING

21B.1 GENERAL. The Pipeline Listing, which appears on the following pages, lists the piping systems, together with the operating conditions and types of pipe and valves to be used with each system.

Unless otherwise indicated in the column entitled "Special Features," the type of fittings, flanges, and gaskets to be used with each system shall be in accordance with the requirements specified in Section 21C of these specifications.

Abbreviations in the Pipeline Listing are identified as follows.

BW = butt welding
SW = socket welding
FLG = flanged
CS = carbon steel
2-1/4 CR = 2-1/4 per cent chromium alloy steel
1-1/4 CR = 1-1/4 per cent chromium alloy steel
5 CR = 5 per cent chromium alloy steel
SS = stainless steel having a chromium-nickel content of not less than 18-8 per cent
SCR = screwed
BR = bronze or brass
CI = cast iron
PL = polypropylene lined
PVC = polyvinyl chloride
SCH = schedule
STD WT = standard weight
GR = grade
BFLY = butterfly valve

21B.2 SYSTEM IDENTIFICATIONS. The Pipeline Listing utilizes the project functional system codes for identification of the piping systems. These codes are listed on the Piping and Instrument Diagram Legend Sheet, M1001.

PIPELINE LISTING BOTTOM ASH HANDLING (ASA)		PRESSURES AND TEMPERATURES OPERATING	DESIGN	TEST PRESSURE psi	PIPE	VALVES 2" & SMALLER	2½" & LARGER	INSULATION CLASS	SPECIAL FEATURES
ASA-A:	ASH WATER RECLAIM PUMPS 1A AND 1B DISCHARGE TO ASH WATER PUMPS	90 PSIG 60 F	125 PSIG 100 F	125	ABOVE GROUND PIPE: ASTM A53 GR B 2-1/2" AND LARGER: STD. WT. 2" AND SMALLER: XS UNDERGROUND PIPE: CAST IRON CLASS 22 MECHANICAL JOINT	600 LB CS, SW	150 LB CS, BW AWWA 150 LB WAFER BFLY	H ON ABOVE GROUND PIPE	ALL MECHANICAL JOINT PIPE TO BE PROVIDED WITH THRUST BLOCKS
ASA-B:	ASH WATER PUMP DISCHARGE TO USE POINTS; BEARING WATER BOOSTER PUMPS 1A AND 1B DISCHARGE TO USE POINTS	170 PSIG 60 F	285 PSIG 100 F	300	ASTM A106 GR B 2-1/2" AND LARGER: STD. WT. 2" AND SMALLER: XS	600 LB CS, SW 150 LB CS, FLG PLUG	150 LB CS, BW 150 LB CS, FLG PLUG ANSI 150 LB WAFER BFLY	H ON ABOVE GROUND PIPE	UNDERGROUND PIPING TO BE COATED AND WRAPPED

PIPELINE LISTING COMPRESSED AIR SYSTEM (CAA)		PRESSURES AND TEMPERATURES OPERATING	DESIGN	TEST PRESSURE psi	PIPE	VALVES 2" & SMALLER	2½" & LARGER	INSULATION CLASS	SPECIAL FEATURES
CAA-A:	ALL COMPRESSED AIR PIPING WITH THE EXCEPTION OF THE SECTION OF PIPING FROM THE DISCHARGE OF AFTERFILTERS 1A & 1B TO AND INCLUDING THE TEE WHERE THE INSTRUMENT AIR SUPPLY PIPING TAKES OFF AND THE INSTRUMENT AIR SUPPLY PIPING.	125 PSIG 100 F	150 PSIG 115 F	100 AIR TEST	ASTM A53 GR. B SCH 80	200 LB WOG, SCR, BRONZE AIR CHECKS SHALL BE 150 LB CS, WAFER	150 LB CS, BW	NONE	UNDERGROUND PIPING SHALL BE COATED AND WRAPPED. USE TEFLON TAPE BETWEEN ALL SCREWED JOINTS WHERE DISSIMILAR MATERIALS ARE MATED.
CAA-B:	COMPRESSED AIR PIPING FROM THE DISCHARGE OF AFTERFILTERS 1A & 1B TO AND INCLUDING THE TEE WHERE THE INSTRUMENT AIR SUPPLY PIPING TAKES OFF; AND THE INSTRUMENT AIR SUPPLY PIPING.	125 PSIG 100 F	150 PSIG 115 F	100 AIR TEST	ASTM B88 TYPE K DRAWN TEMPER TUBING	200 LB BR, SW	NONE	NONE	

HASTINGS 7677
121578

PIPELINE LISTING SERVICE & FIREWATER (WSA)		PRESSURES AND TEMPERATURES OPERATING	DESIGN	TEST PRESSURE psi	PIPE	VALVES 2" & SMALLER	2½" & LARGER	INSULATION CLASS	SPECIAL FEATURES
WSA-A:	WELL WATER PUMPS DISCHARGE PIPING TO CATHODIC FLANGES; 2" AND SMALLER UNDERGROUND PIPING ALL ABOVE GROUND SERVICE & FIREWATER PIPING EXCEPT THAT ON THE DISCHARGE SIDE OF THE FOLLOWING PUMPS: FIRE WTR BSTR PUMP 1, ASH WTR PUMPS 1A & 1B, BRG WTR BSTR PUMPS 1A & 1B.	75 PSI 60 F	120 PSI 80 F	180	ASTM A53 GR B 2-1/2" AND LARGER: STD WT 2" AND SMALLER: XS	600 LB, CS, SW	150 LB CS, BW DUO CHECK & BFLY VALVES SHALL BE 150 LB, CI, WAFER	H ON ABOVE GROUND PIPING IN PLANT & OUT-BUILDINGS	UNDERGROUND PIPING TO BE COATED AND WRAPPED
WSA-B:	ALL UNDERGROUND SERVICE & FIREWATER & POTABLE WTR. PIPING	75 PSI 60 F	120 PSI 80 F	180	CAST IRON CLASS 22 MECHANICAL JOINT	NONE	150 LB CI, FLG	NONE	ALL MECHANICAL JOINT PIPE TO BE PROVIDED WITH THRUST BLOCKS
WSA-C:	SERVICE & FIREWATER PIPING ON THE DISCHARGE SIDE OF THE FIREWATER BOOSTER PUMP 1.	140 PSI 60 F	200 PSI 80 F	275	ASTM A53 GR B 2-1/2 AND LARGER: STD WT 2" AND SMALLER: XS	600 LB CS, SW	150 LB CS, BW	H	

HASTINGS 7677
121578

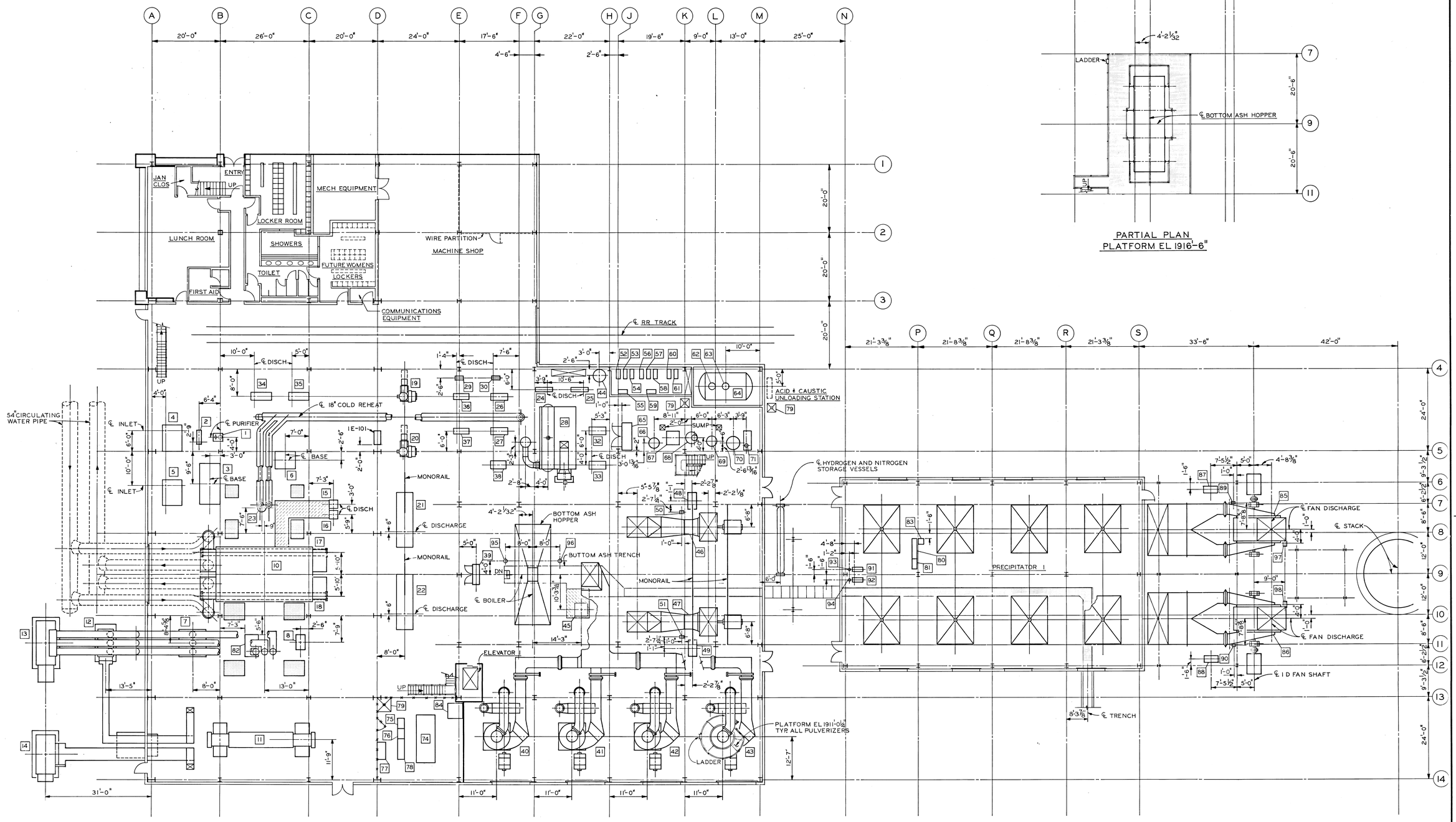

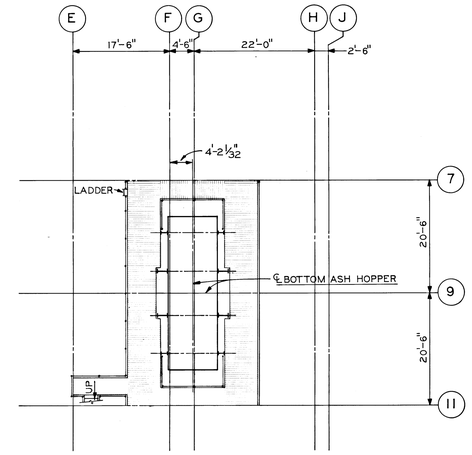

PARTIAL PLAN
PLATFORM EL 1916'-6"

EQUIP. NO.	EQUIPMENT	LOCATION
1	TURBINE OIL CENTRIFUGE 1	B5
2	TURBINE OIL TRANSFER PUMP 1	B5
3	TURBINE OIL STORAGE TANK 1	B5
4	CONDENSER EXHAUSTER IA	A5
5	CONDENSER EXHAUSTER IB	A5
6	ELECTRO-HYDRAULIC CONTROL UNIT 1	C5
7	GENERATOR PT AND SURGE ARRESTER COMPARTMENT 1	B10
8	HYDROGEN SEAL OIL UNIT 1	C10
9		
10	CONDENSER 1	C9
11	480V SECONDARY UNIT SUBSTATION 1	B13
12	MAIN AUXILIARY TRANSFORMER 1	A10
13	GENERATOR TRANSFORMER 1	A10
14	RESERVE AUXILIARY TRANSFORMER 1	A13
15	CONDENSATE PUMP IA	C8
16	CONDENSATE PUMP IB	C8
17	AUXILIARY COOLING WATER HEAT EXCHANGER IA	C8
18	AUXILIARY COOLING WATER HEAT EXCHANGER IB	C10
19	AIR COMPRESSOR IA	D4
20	AIR COMPRESSOR IB	D5
21	BOILER FEED PUMP IA	D8
22	BOILER FEED PUMP IB	D10
23	MISCELLANEOUS DRAINS RECEIVER 1	B8
24	IGNITOR FUEL OIL PUMP IA	G4
25	IGNITOR FUEL OIL PUMP IB	H4
26	AUXILIARY BOILER MAKEUP WATER PUMP IA	F4
27	AUXILIARY BOILER MAKEUP WATER PUMP IB	F5
28	AUXILIARY BOILER 1	G5
29	BEARING WATER BOOSTER PUMP IA	E4
30	BEARING WATER BOOSTER PUMP IB	E4
31		
32	ASH WATER PUMPS IA	H5
33	ASH WATER PUMPS IB	H5
34	AUXILIARY COOLING WATER PUMP IA	C4
35	AUXILIARY COOLING WATER PUMP IB	C4
36	AIR PREHEAT WATER PUMP IA	E4
37	AIR PREHEAT WATER PUMP IB	E5
38	FIRE WATER BOOSTER PUMP 1	G4
39	ASH HANDLING PANEL 1	E9
40	PULVERIZER IA	G13
41	PULVERIZER IB	H13
42	PULVERIZER IC	K13
43	PULVERIZER ID	M13
44	BOILER BLOWDOWN TANK 1	H4
45	MILLS REJECTS HOLDING HOPPER 1	H10
46	FORCED DRAFT FAN IA	L7
47	FORCED DRAFT FAN IB	L11
48	FORCED DRAFT FAN OIL UNIT IA	L7
49	FORCED DRAFT FAN OIL UNIT IB	L11
50	FORCED DRAFT FAN BLADE DRIVE UNIT IA	L7
51	FORCED DRAFT FAN BLADE DRIVE UNIT IB	L11
52	AUXILIARY BOILER HYDRAZINE FEED PUMP 1	J4
53	HYDRAZINE FEED PUMP IA	J4
54	HYDRAZINE FEED PUMP IB	J4
55	HYDRAZINE FEED TANK 1	J4
56	PHOSPHATE FEED PUMP IA	J4
57	PHOSPHATE FEED PUMP IB	J4
58	AUXILIARY BOILER PHOSPHATE FEED PUMP 1	J4
59	PHOSPHATE FEED TANK 1	J4
60	DEMINERALIZER CAUSTIC REGENERATION PUMP IA	K4
61	DEMINERALIZER CAUSTIC REGENERATION PUMP IB	K4
62	DEMINERALIZER ACID REGENERATION PUMP IA	L4
63	DEMINERALIZER ACID REGENERATION PUMP IB	L4
64	DEMINERALIZER ACID STORAGE TANK 1	L4
65	DEMINERALIZER CONTROL PANEL 1	J5
66	SECONDARY ANION EXCHANGER 1	J5
67	DEGASIFIED WATER TRANSFER PUMPS IA AND IB	K5
68	FORCED DRAFT DEGASIFIER 1	K5
69	PRIMARY ANION EXCHANGER 1	K5
70	PRIMARY CATION EXCHANGER 1	L5
71	POLISHING FILTER 1	L5
72		
73		
74	UNIT BATTERY 1	E13
75	BATTERY CHARGER IA	D13
76	BATTERY CHARGER IB	D13
77	UNIT INVERTER 1	D14
78	D.C. PANEL 1	D14
79	SAFETY SHOWER	
80	PRECIPITATOR HOPPER HEATER CONTROL PANEL 1	P8
81	PRECIPITATOR HOPPER VIBRATOR/LEVEL CONTROL PANEL 1	P9
82	NEUTRAL GROUNDING COMPARTMENT	B10
83	MOTOR CONTROL CENTER IE	N10
84	JUNCTION BOX	E13
85	INDUCED DRAFT FAN IA	S8
86	INDUCED DRAFT FAN IB	S10
87	INDUCED DRAFT FAN OIL UNIT IA	S6
88	INDUCED DRAFT FAN OIL UNIT IB	S12
89	INDUCED DRAFT FAN INLET VANE DRIVE UNIT IA	S9
90	INDUCED DRAFT FAN INLET VANE DRIVE UNIT IB	S9
91	PRECIPITATOR ASH FLUIDIZING AIR BLOWER IA	N9
92	PRECIPITATOR ASH FLUIDIZING AIR BLOWER IB	N9
93	PRECIPITATOR ASH FLUIDIZING AIR HEATER IA	N9
94	PRECIPITATOR ASH FLUIDIZING AIR HEATER IB	N9
95	AIR-WATER RESERVOIR IA	F9
96	AIR-WATER RESERVOIR IB	G9
97	INDUCED DRAFT FAN OUTLET DAMPER DRIVE UNIT IA	S8
98	INDUCED DRAFT FAN OUTLET DAMPER DRIVE UNIT IB	S12

NO	DATE	REVISIONS	DWN	CK	ACC	APP
7	9-15-81	CONFORMED TO CONSTRUCTION RECORDS				
6	11-1-79	GENERAL REVISIONS	TJ		CJS	CJS
5	8-24-79	REVISED AS CIRCLED	GEC	GEC	CJS	CJS
4	3-21-79	ISSUE FOR CONSTRUCTION	TJ	JAF	CJS	CJS
3	2-23-79	INFORMATION SPEC. 72.0000				
2	2-9-79	ISSUED FOR BID, SPEC. 73.0000				
1	12-15-78	BID 72.0000				
0	11-17-78	ISSUED FOR BID SPEC. 71.0000				

SCALE: 3/32" = 1'-0"

I HEREBY CERTIFY THAT THIS DOCUMENT WAS PREPARED BY ME OR UNDER MY DIRECT SUPERVISION AND THAT I AM A DULY REGISTERED PROFESSIONAL ENGINEER UNDER THE LAWS OF THE STATE OF NEBRASKA
SIGNED
DATE 3-21-79 REG. NO. E-2965

BLACK & VEATCH
CONSULTING ENGINEERS
PROJECT 7677

CITY OF HASTINGS, NEBRASKA
HASTINGS ENERGY CENTER UNIT 1
PLANT ARRANGEMENT
GROUND FLOOR EL 1902'-0"

B&V DWG NO. A1001 REV. 7

6-20-78

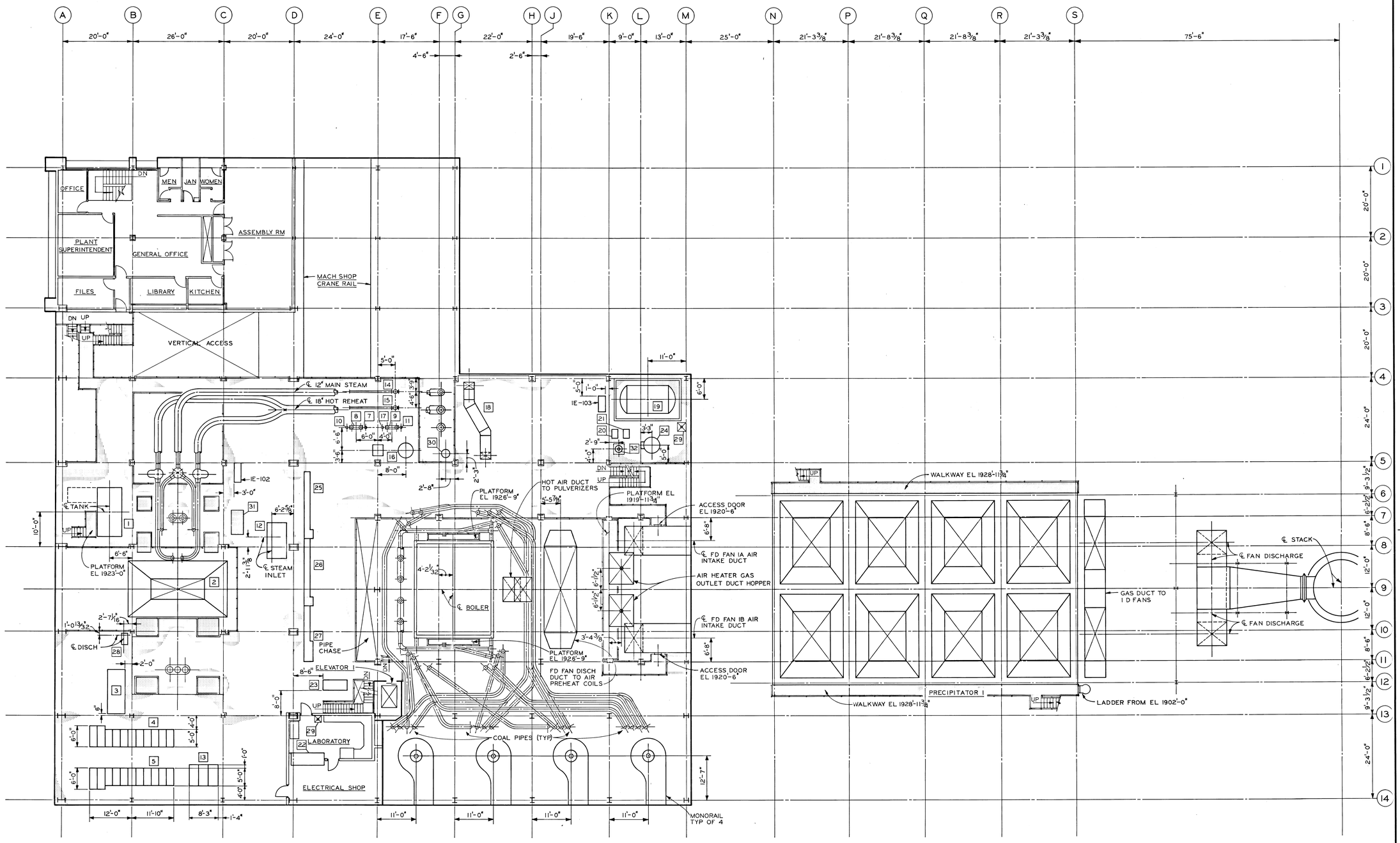

EQUIP. NO.	EQUIPMENT	LOCATION
1	TURBINE OIL RESERVOIR 1	B8
2	CONDENSER 1	C9
3	EXCITATION SWITCHGEAR 1	B13
4	4160 VOLT SWITCHGEAR 1A	B13
5	4160 VOLT SWITCHGEAR 1B	B14
6	REFRIGERATION AIR DRYER 1	E5
7	AIR PREFILTER 1A	E5
8	DESICCANT AIR DRYER 1A	E5
9	DESICCANT AIR DRYER 1B	E5
10	AIR AFTERFILTER 1A	E5
11	AIR AFTERFILTER 1B	E5
12	GLAND STEAM CONDENSER 1	D8
13	RELAY SWITCHBOARD	A13
14	COMPRESSED AIR AFTERCOOLER 1A	E4
15	COMPRESSED AIR AFTERCOOLER 1B	E4
16	AIR RECEIVER 1A	E5
17	AIR PREFILTER 1B	E5
18	AUXILIARY BOILER 1 AIR INTAKE DUCT	G5
19	DEMINERALIZER CAUSTIC STORAGE TANK 1	L4
20	DEMINERALIZER REGENERATION WATER PUMP 1A	K5
21	DEMINERALIZER REGENERATION WATER PUMP 1B	K5
22	WATER QUALITY PANEL 1	D13
23	SAMPLE TABLE 1	E13
24	DEMINERALIZER WATER HEATER 1	L5
25	MOTOR CONTROL CENTER 1B	D8
26	MOTOR CONTROL CENTER 1A	D9
27	MOTOR CONTROL CENTER 1C	D10
28	TURBINE BEARING DRAIN EXHAUSTER 1	B10
29	SAFETY SHOWER	—
30	AUXILIARY BOILER 1 STACK	G5
31	REMOVABLE GRATING FOR CONDENSATE PUMP REMOVAL	C5
32	FORCED DRAFT DEGASIFIER	K5

6-20-78

NO	DATE	REVISIONS	DWN	CK	ACC	APP
6	9-15-81	CONFORMED TO CONSTRUCTION RECORDS				
5	8-24-79	REVISED AS CIRCLED	GC	GC	CJS	CJS
4	3-21-79	ISSUE FOR CONSTRUCTION	TJ	GC	CJS	CJS
3	2-23-79	INFORMATION SPEC. 72.0000				
2	2-9-79	ISSUED FOR BID, SPEC. 73.0000				
1	12-15-78	BID 72.0000				
0	11-17-78	ISSUED FOR BID SPEC. 71.0000				

SCALE: 3/32" = 1'-0"

I HEREBY CERTIFY THAT THIS DOCUMENT WAS PREPARED BY ME OR UNDER MY DIRECT SUPERVISION AND THAT I AM A DULY REGISTERED PROFESSIONAL ENGINEER UNDER THE LAWS OF THE STATE OF NEBRASKA
SIGNED
DATE 3-21-79 REG. NO. E-2965

BLACK & VEATCH CONSULTING ENGINEERS
PROJECT 7677

CITY OF HASTINGS, NEBRASKA
HASTINGS ENERGY CENTER UNIT 1
PLANT ARRANGEMENT
MEZZANINE FLOOR EL 1918'-0"

B&V DWG NO. A1002 REV. 6

F-GS-132 A